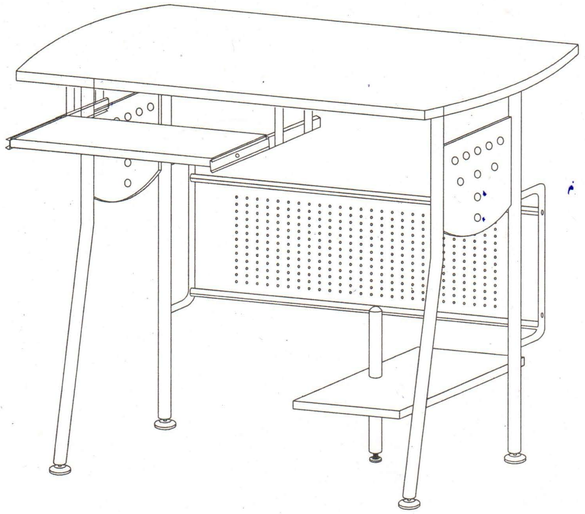

Ax1	Bx1	Cx1	Dx1	Ex1
Fx1	Gx2	Hx4	Ix4	Jx1
Kx8 4x12mm	Lx4	Mx2	Nx1	Ox1
Px1	Qx4 6x40mm	Rx4 6x30mm	Sx6 6x12mm	Tx4 4x6mm
Ux4	Vx1	Wx1	Xx1	

1

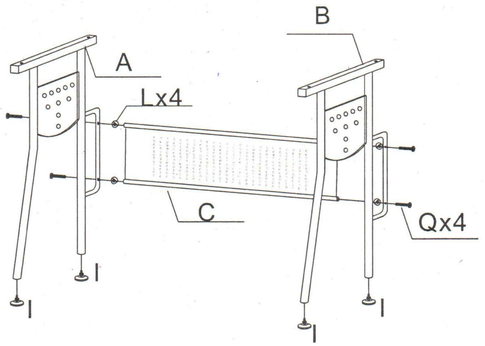

2

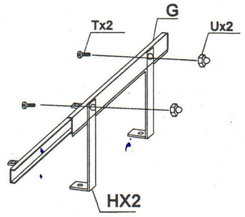

3

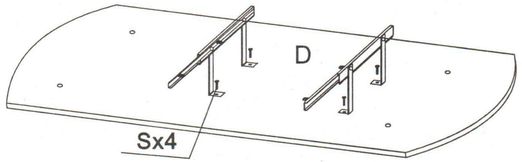

4

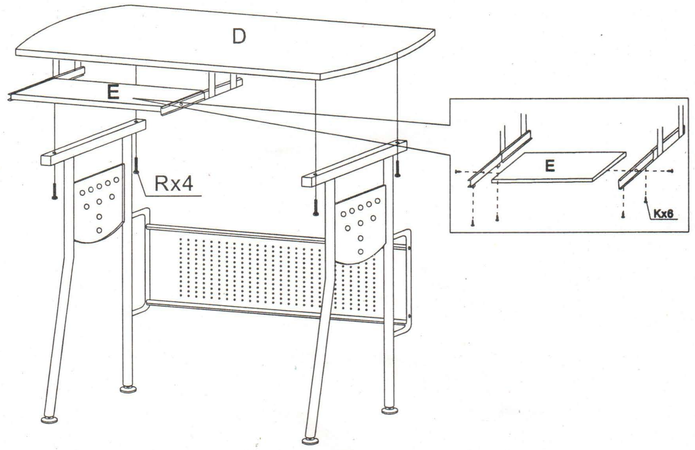

5

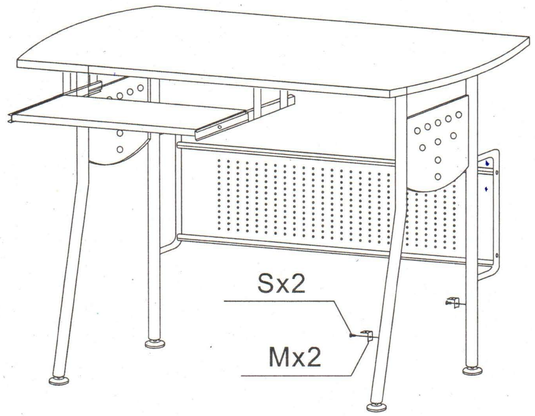

6

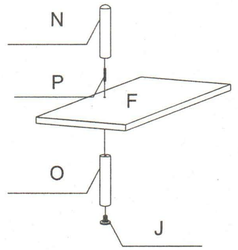
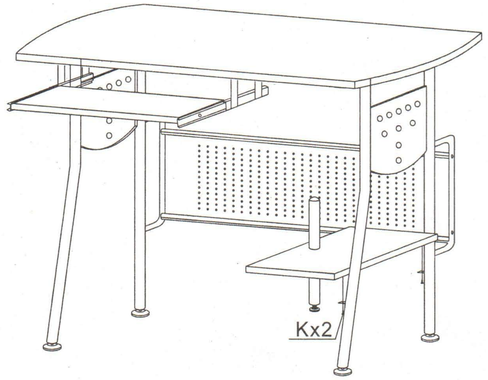
7