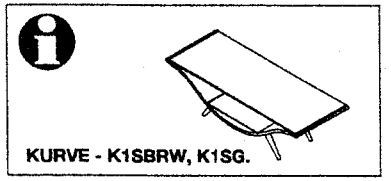

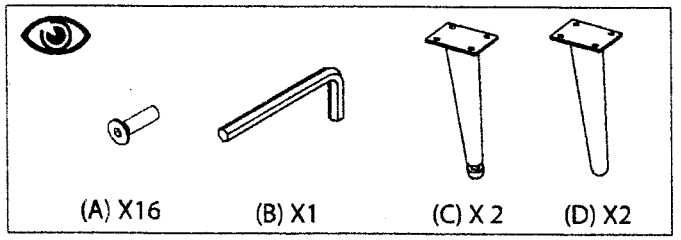

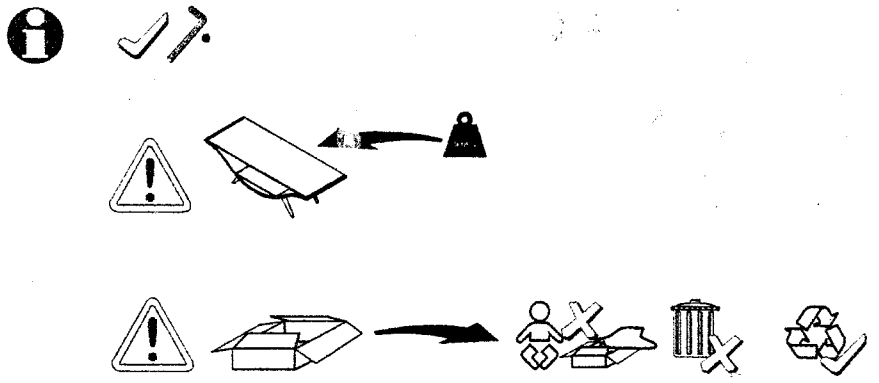

1

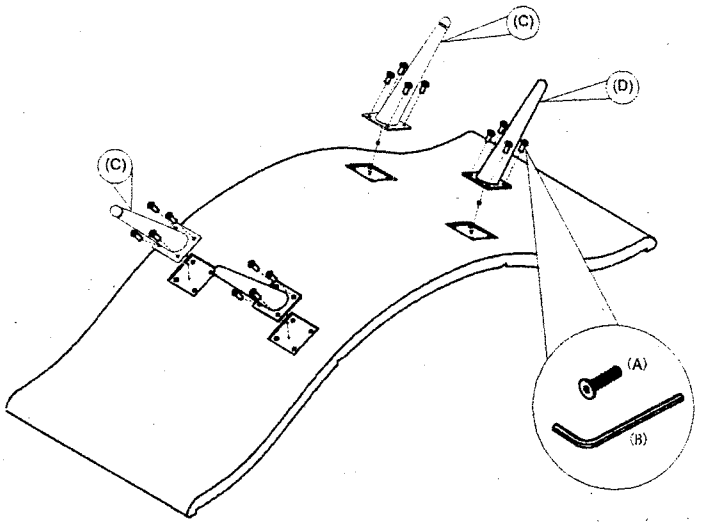
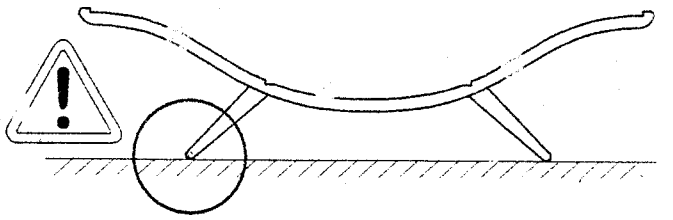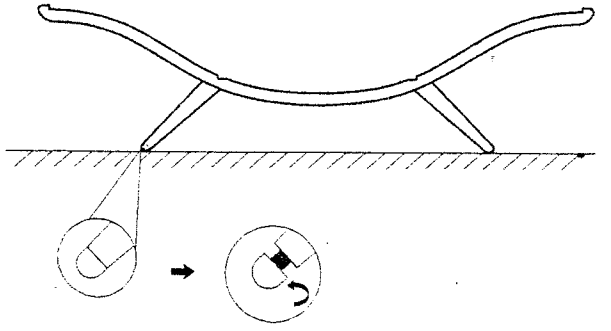
2