KALAX 2x4

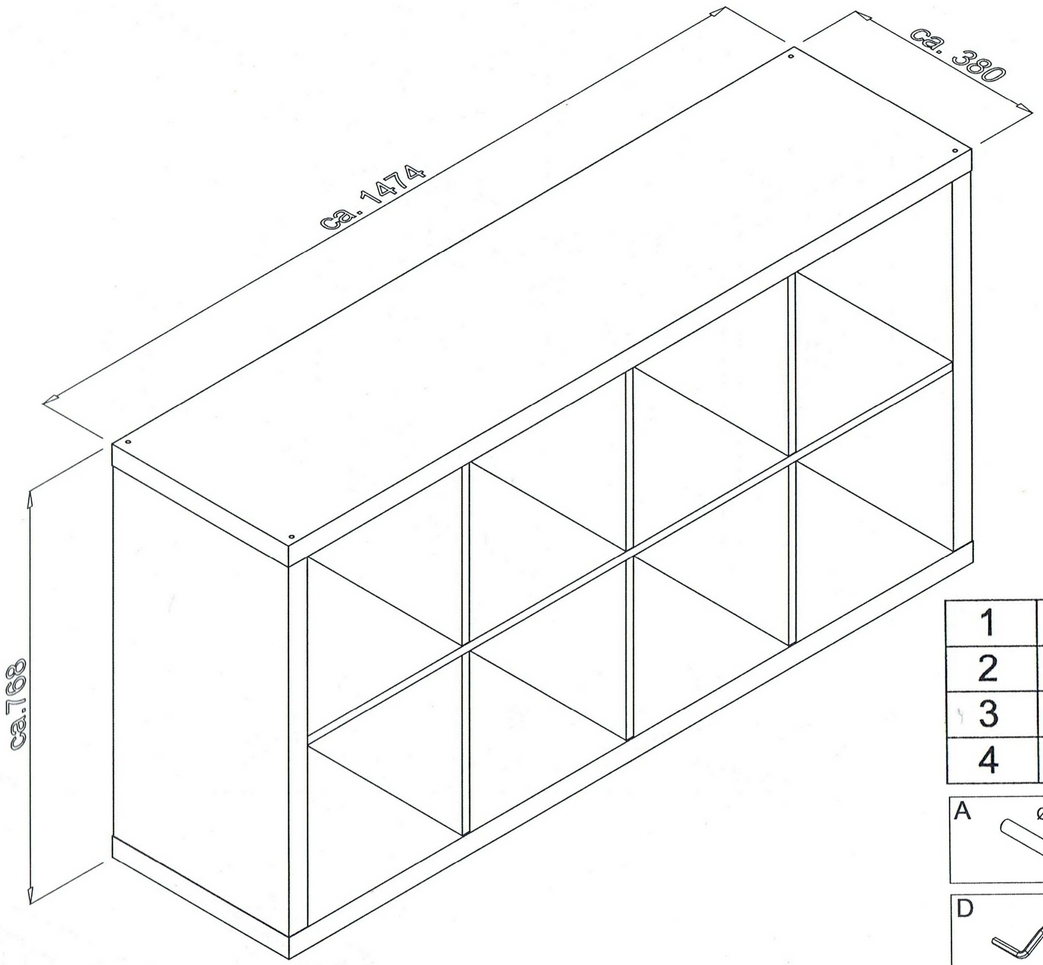

1	x2	ca. 1474 x 380 x 40
2	x2	ca. 688 x 378 x 40
3	x6	ca. 336 x 374 x 16
4	x1	ca. 1392 x 376 x 16

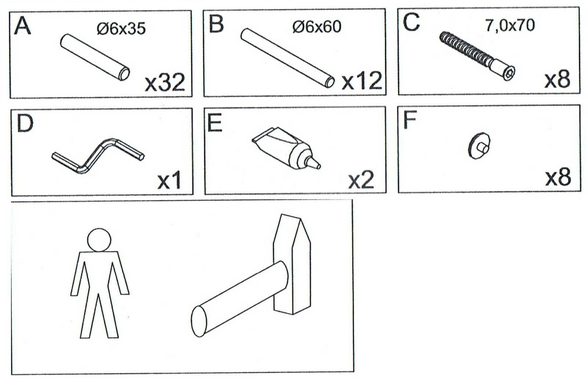

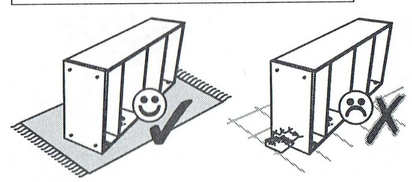

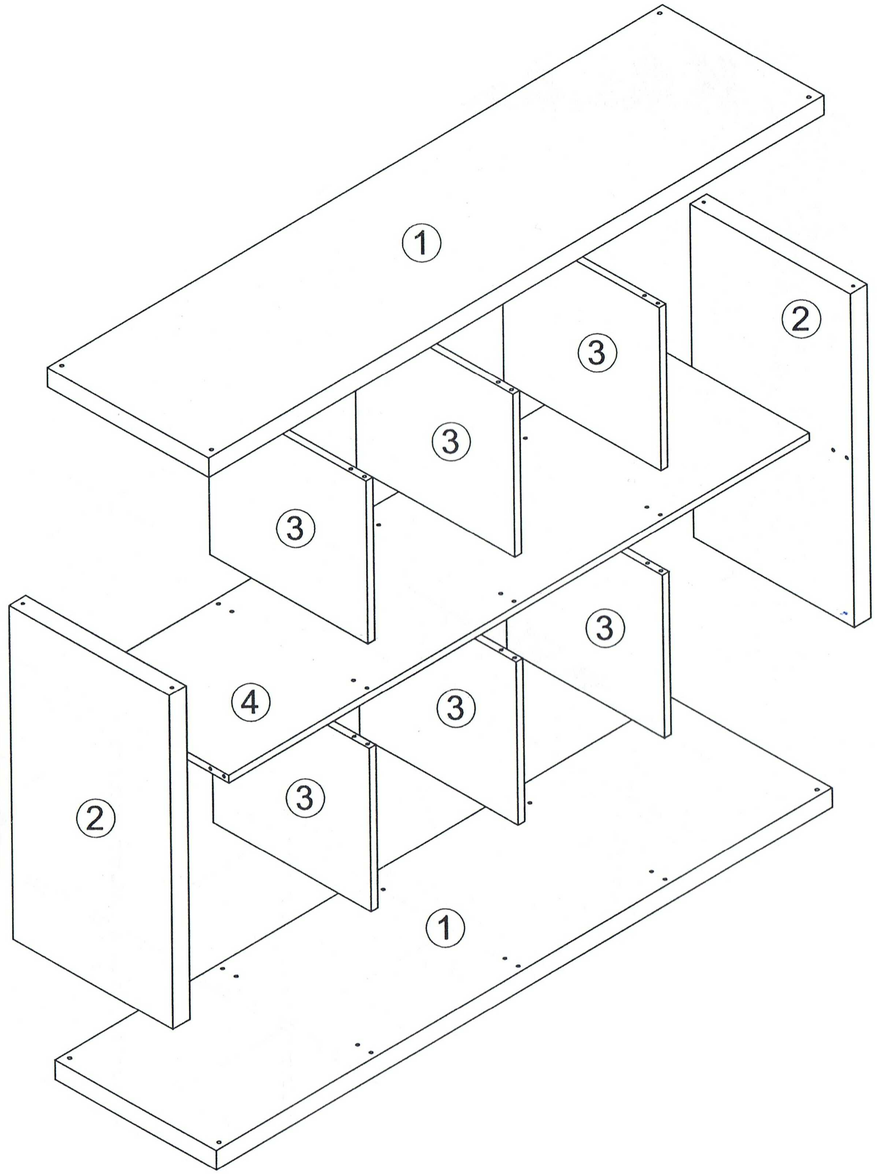

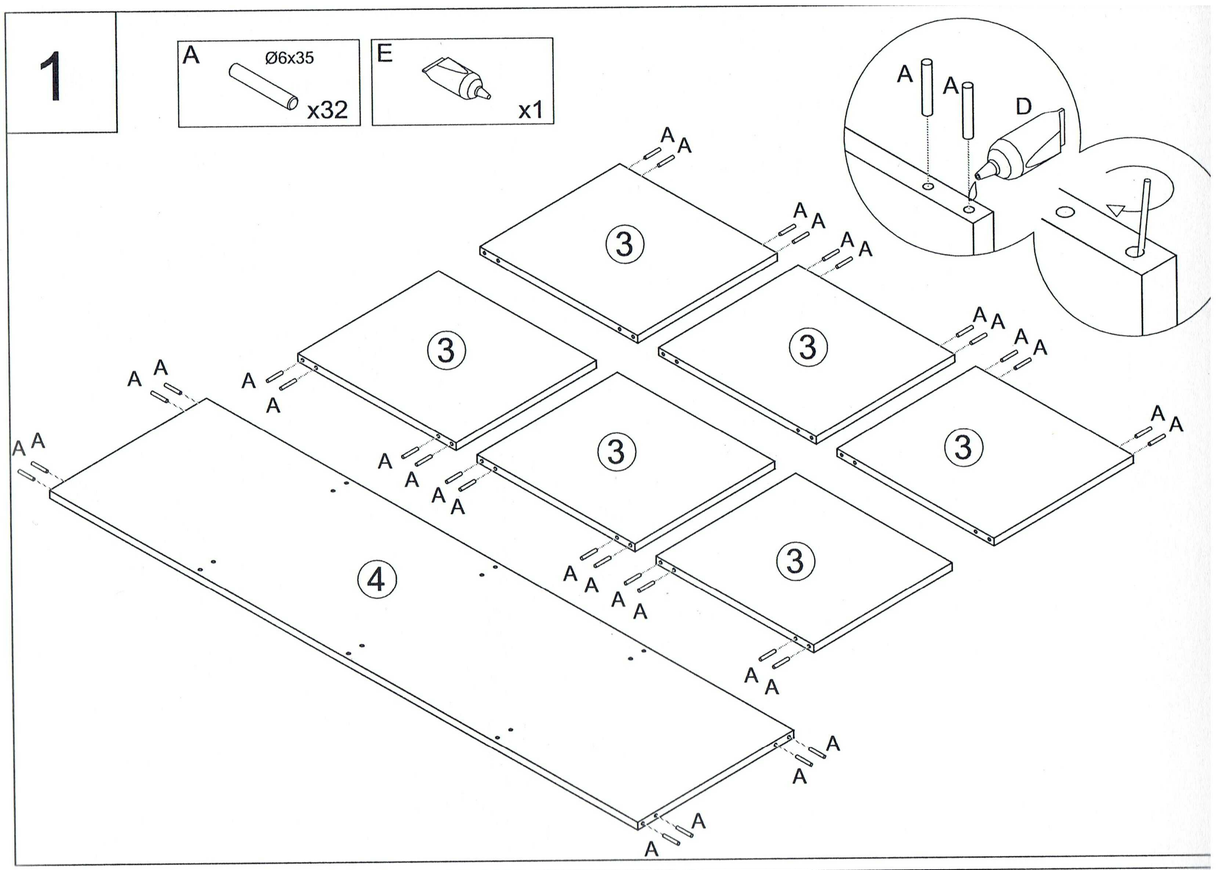
1
A
Ø6x35
x32
E
x1
A
A
D
3
4

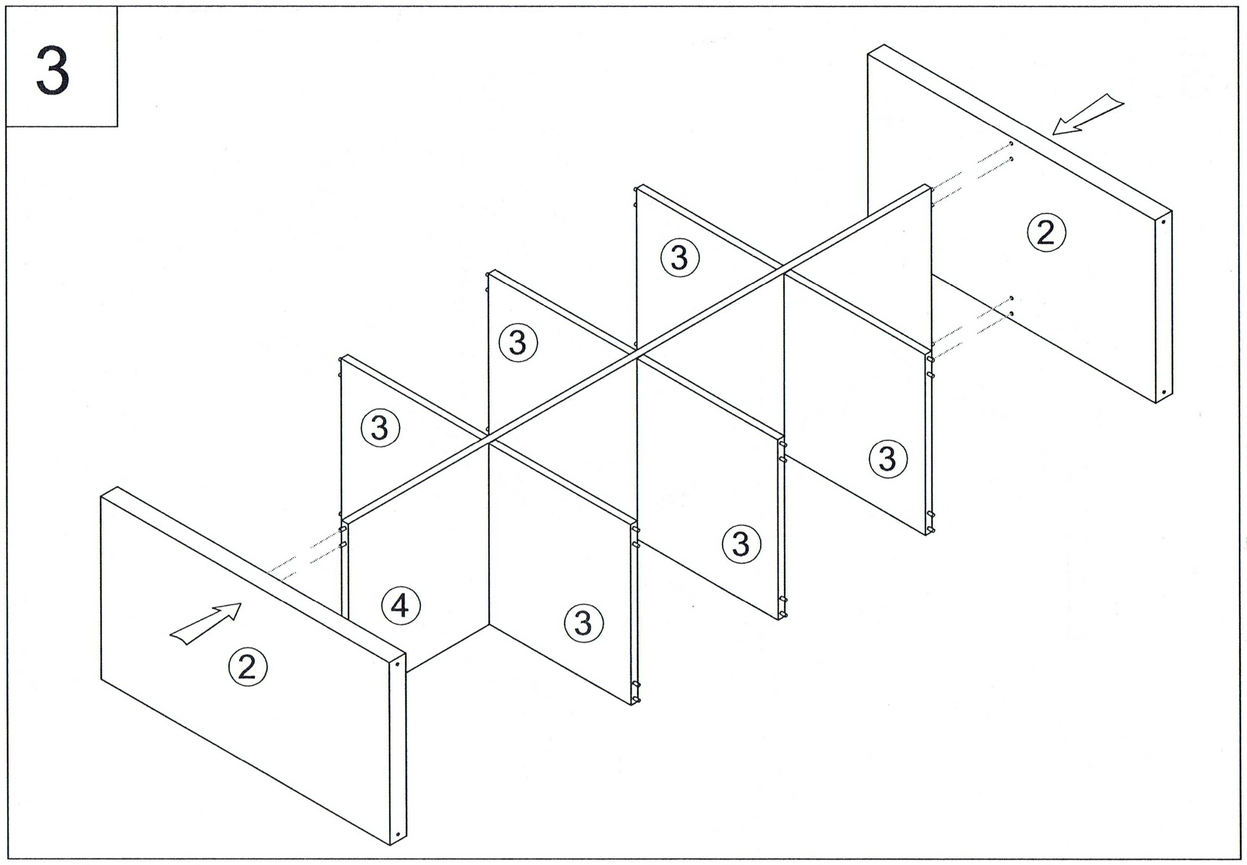
3
2
3
4

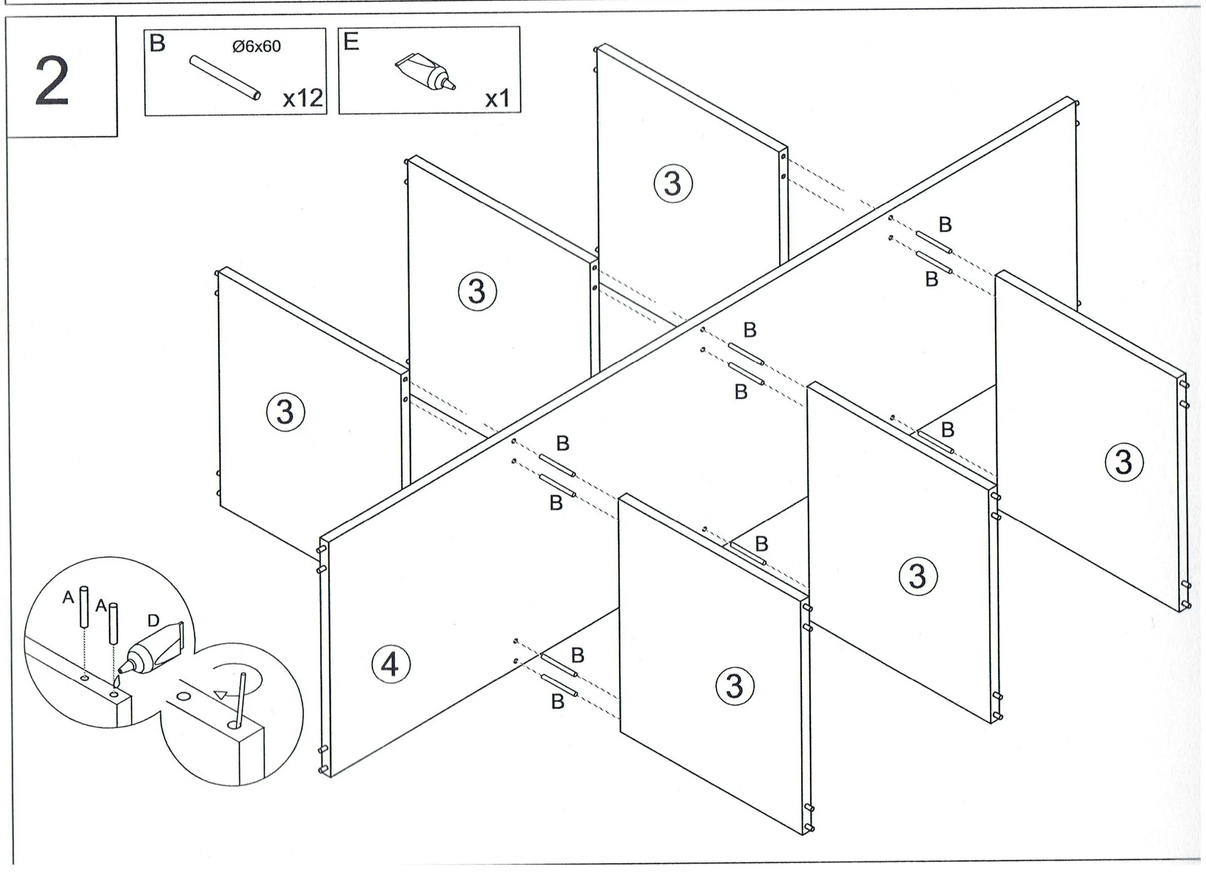
2
B
Ø6x60
x12
E
x1
3
4
B
A
A
D

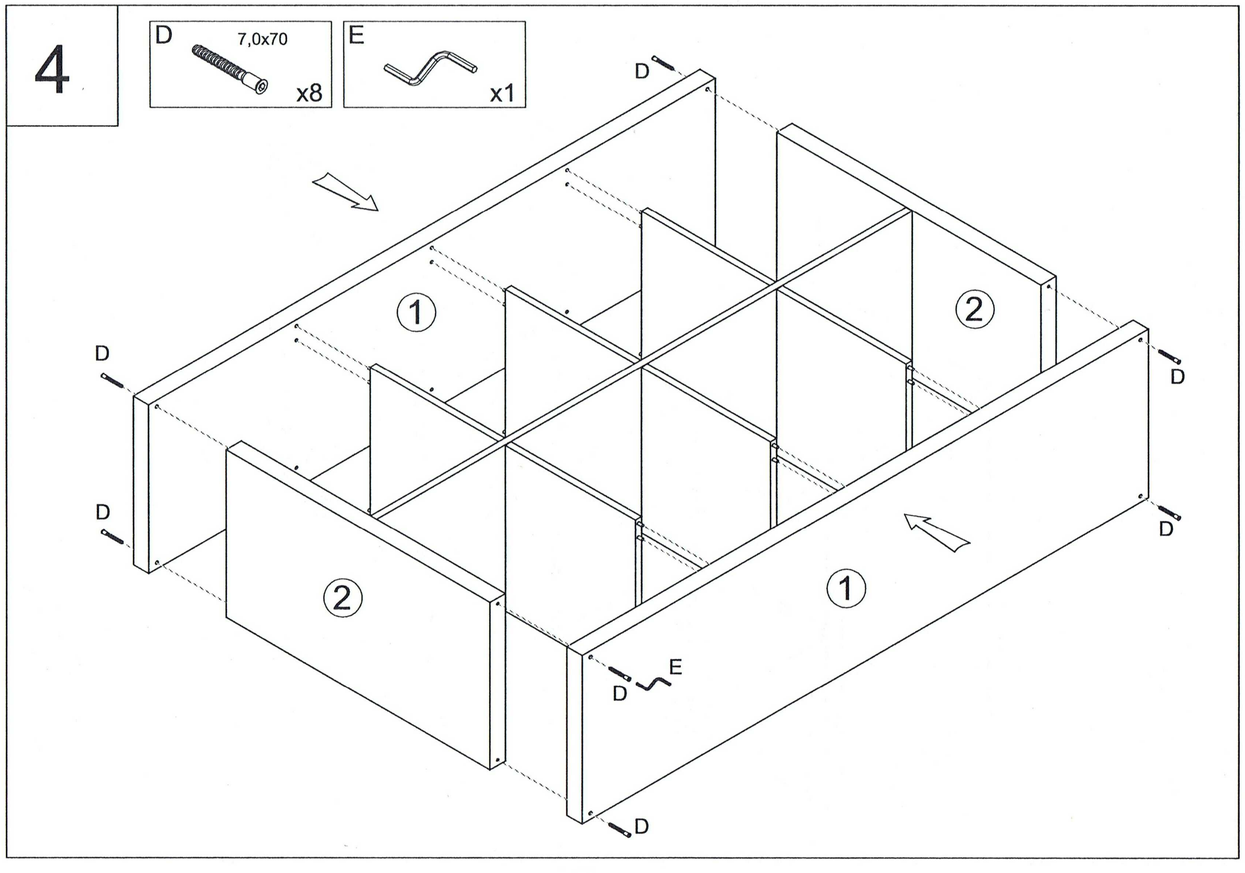
4
D
7,0x70
x8
E
x1
1
2
D
E
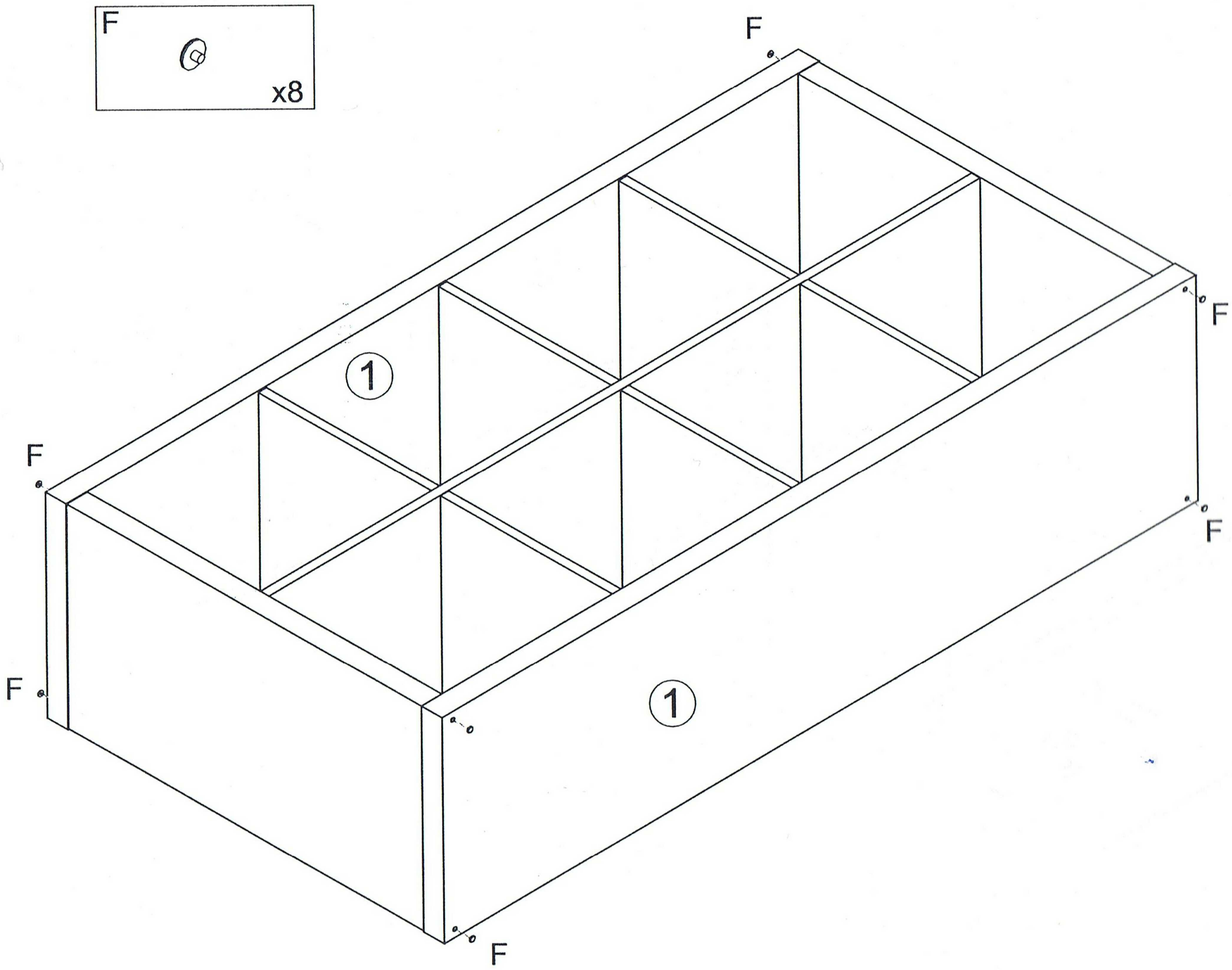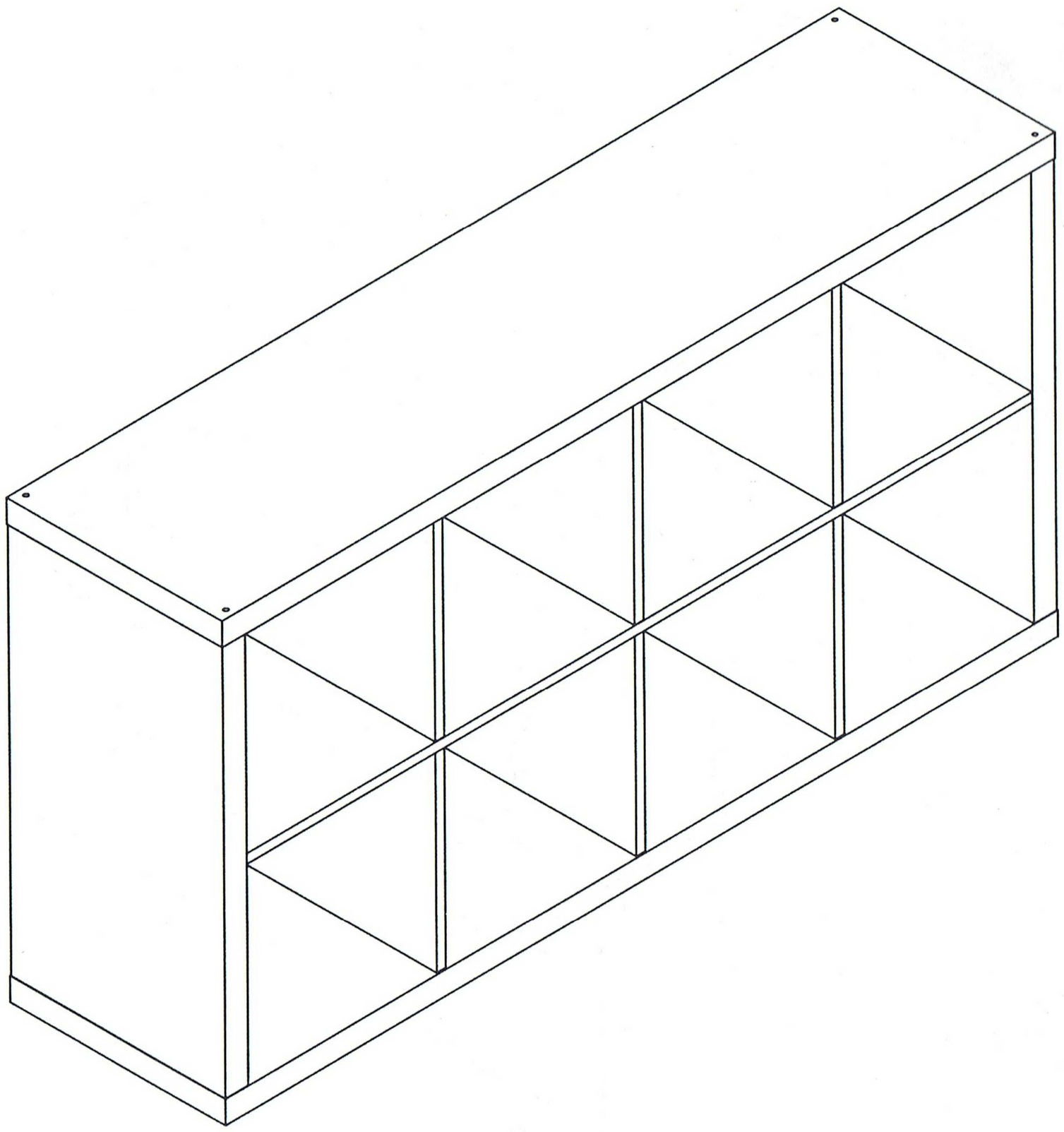
5