# KALAX 3x3

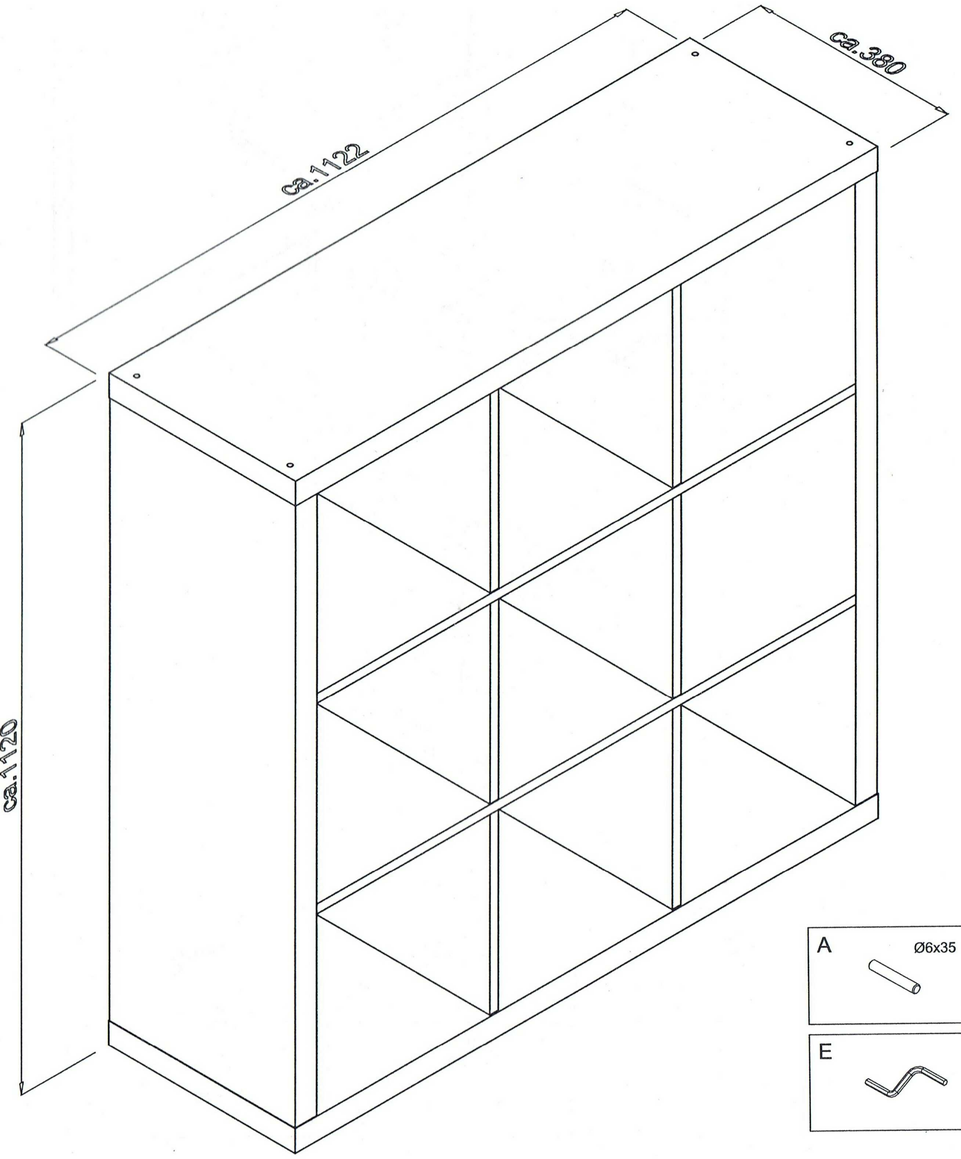


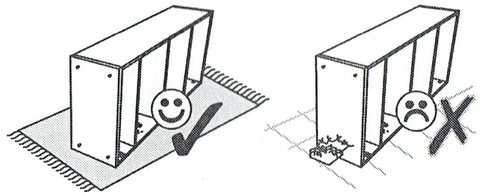

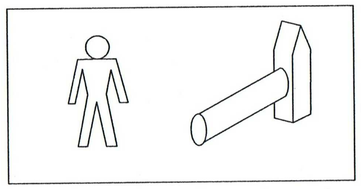

| | | |
|---|---|---|
| 1 | x2 | ca. 1122 x 380 x 40 |
| 2 | x2 | ca. 1040 x 378 x 40 |
| 3 | x6 | ca. 336 x 374 x 16 |
| 4 | x2 | ca. 1040 x 376 x 16 |

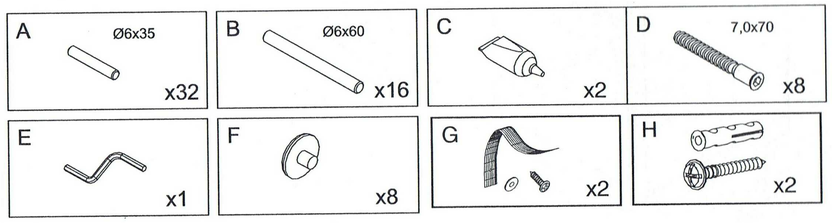


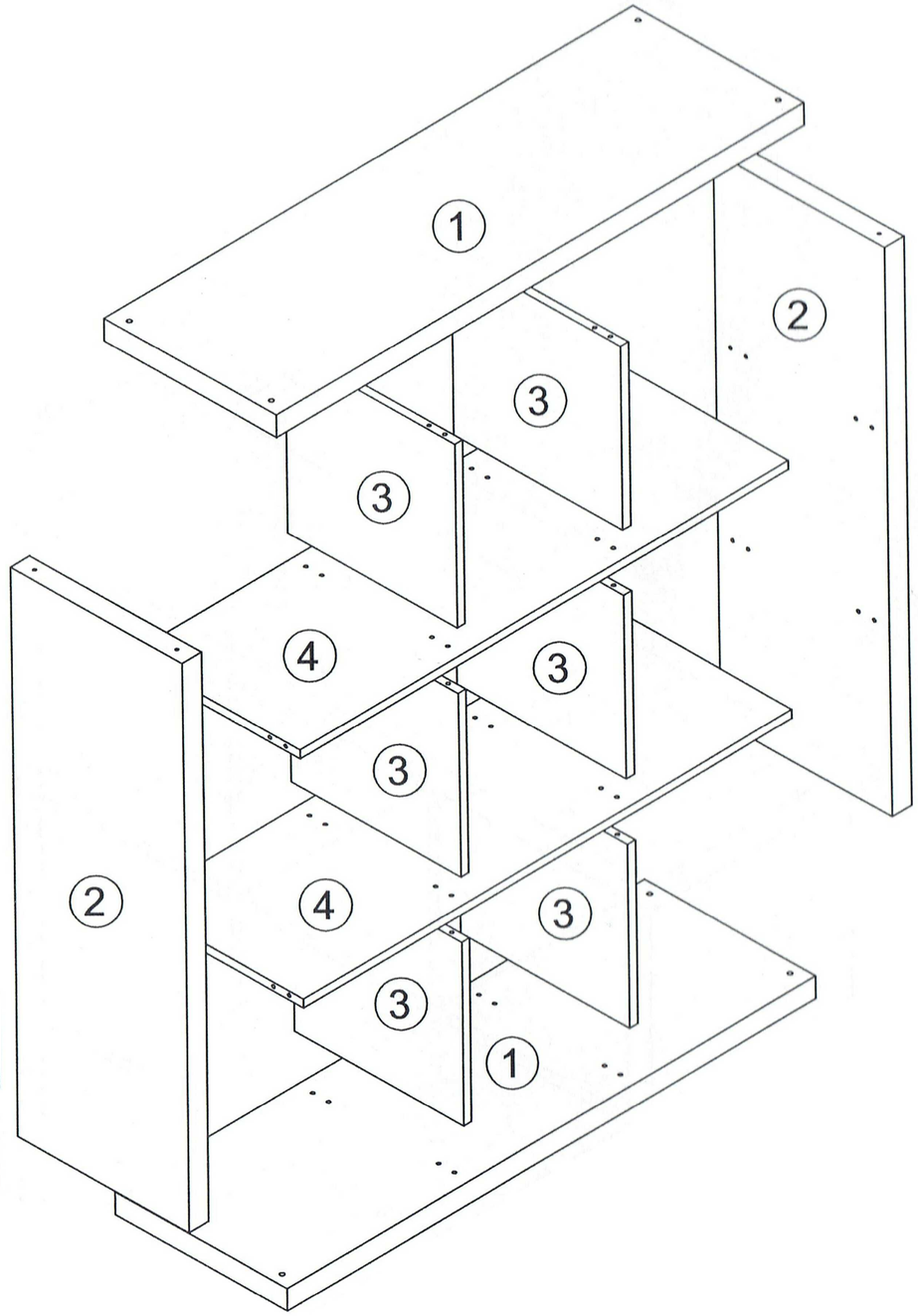

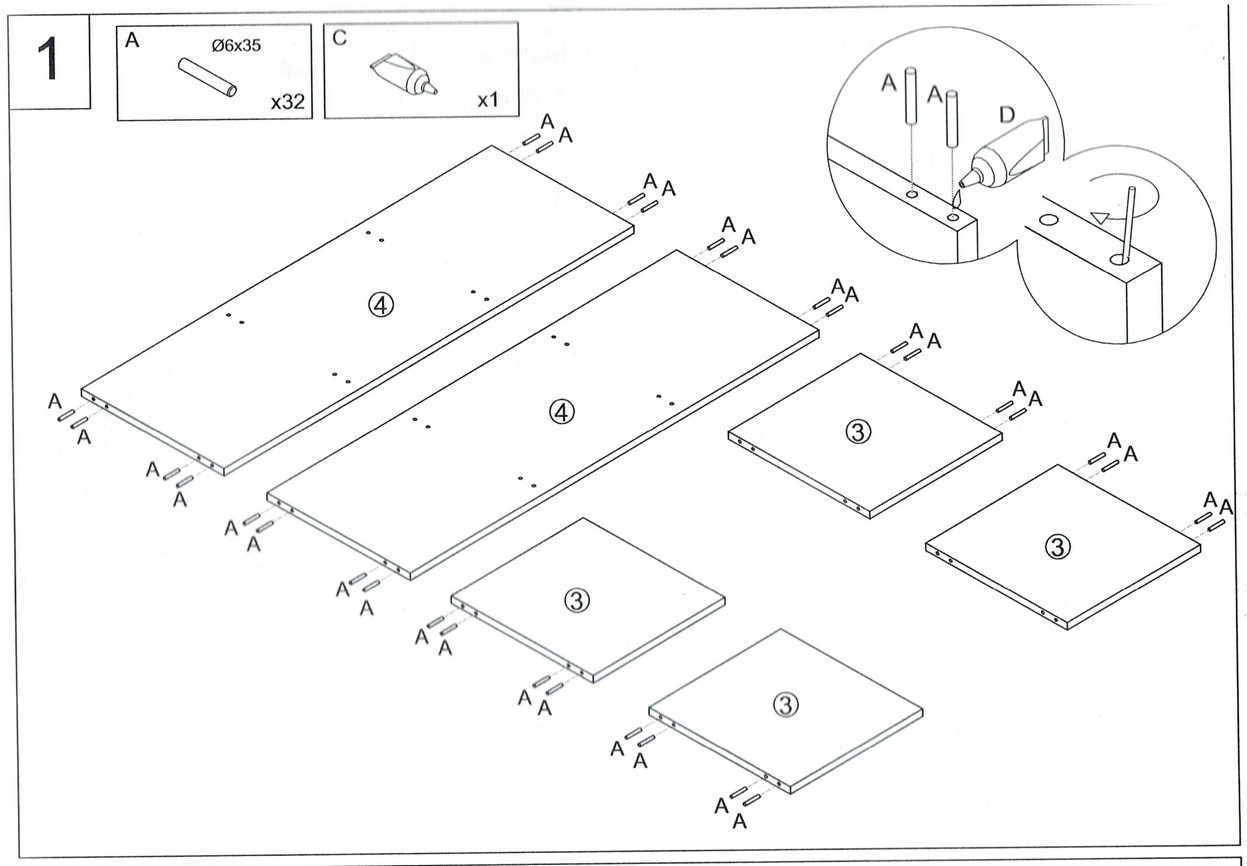
1
A
Ø6x35
x32
C
x1
A
A
D
④
③

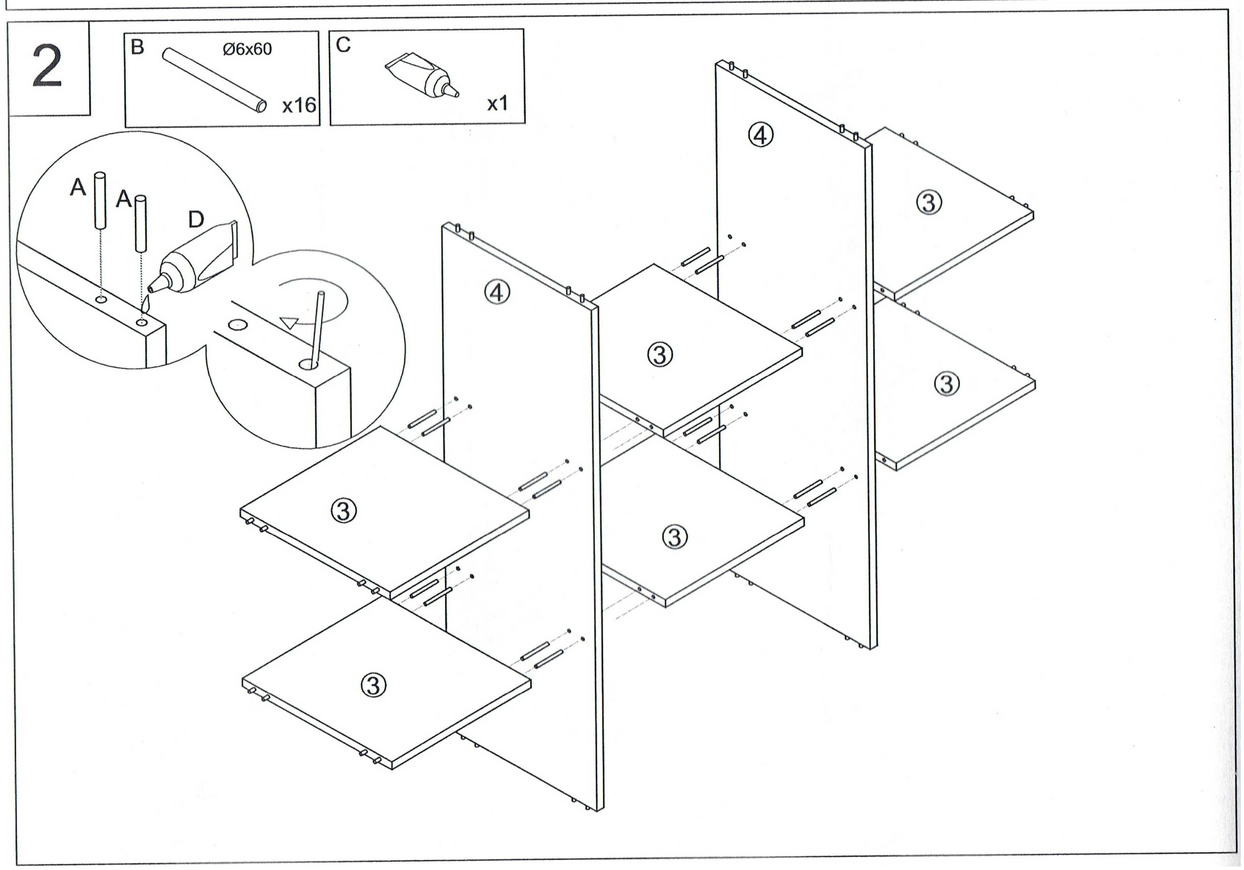
2
B
Ø6x60
x16
C
x1
A
A
D
④
③

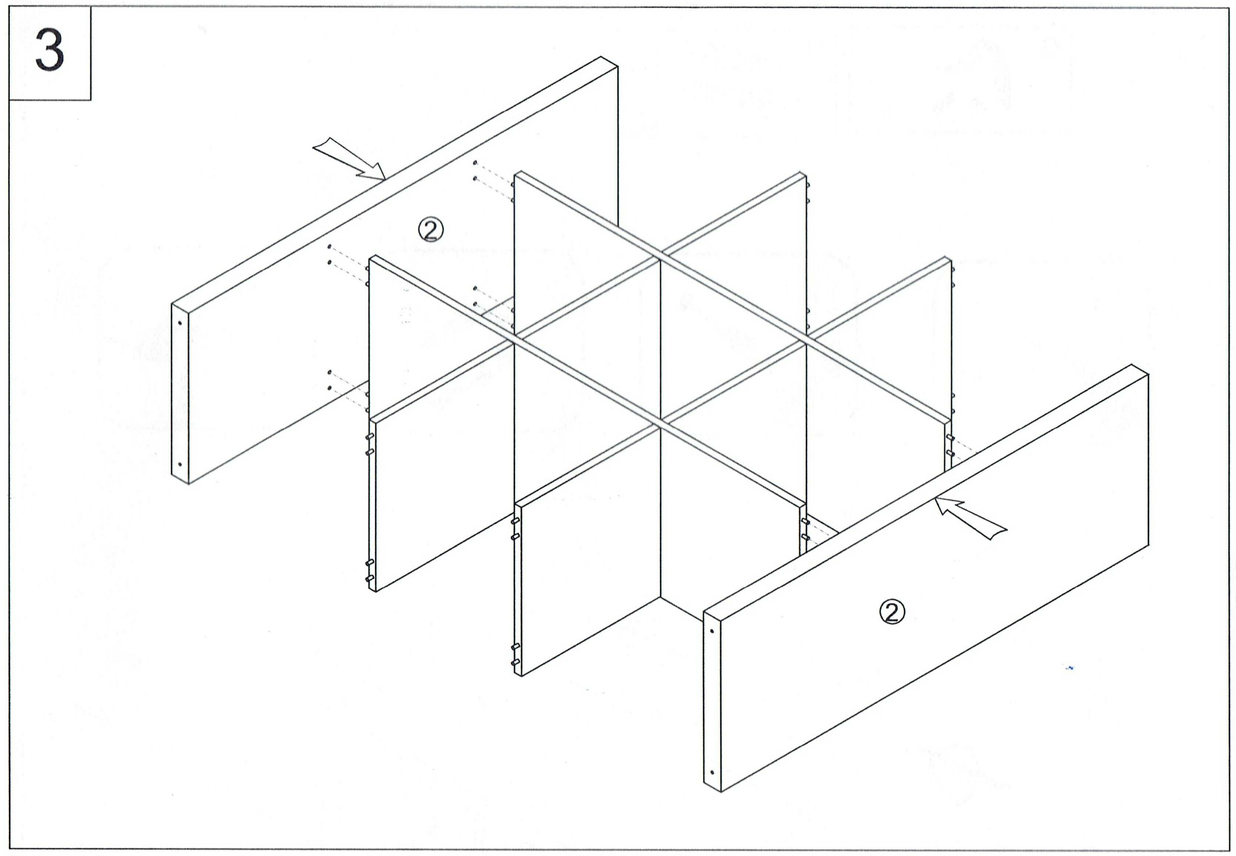
3
②

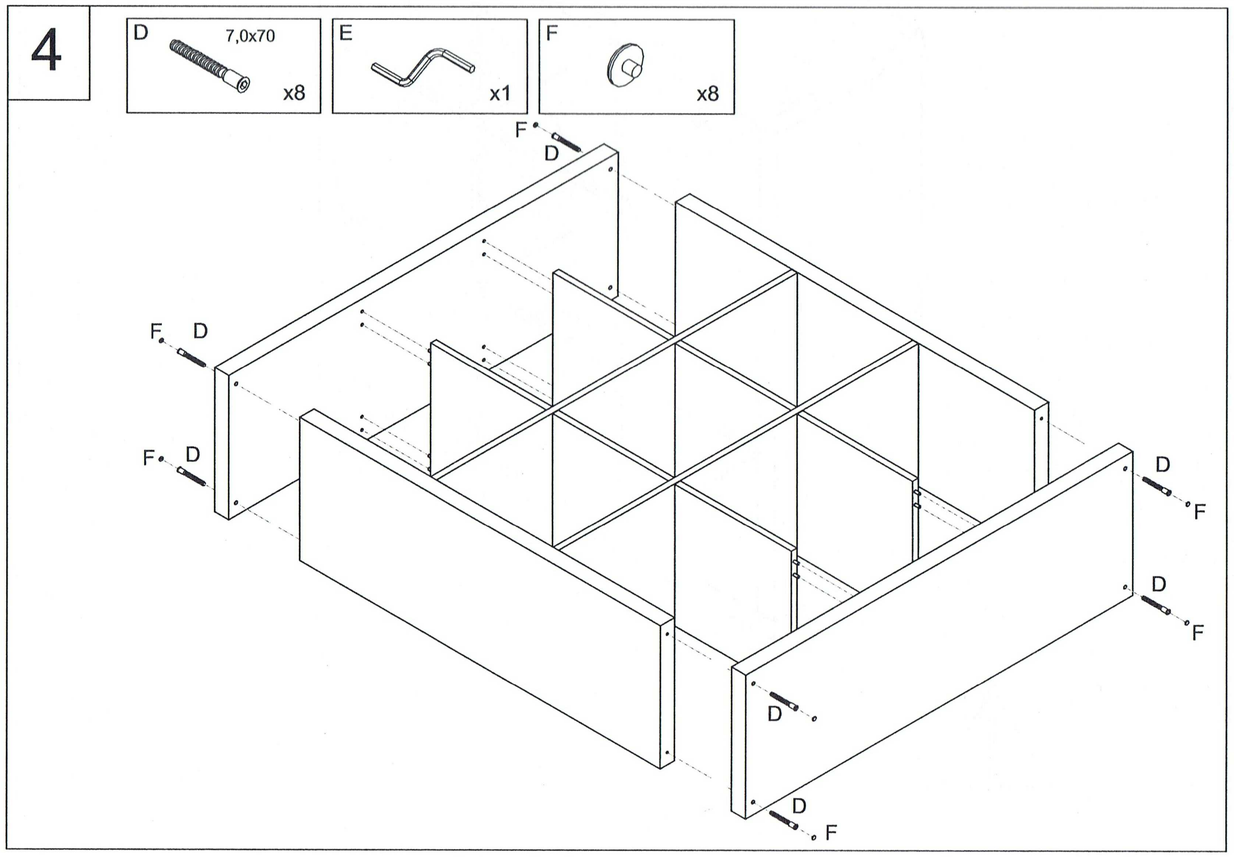
4
D
7,0x70
x8
E
x1
F
x8
F
D
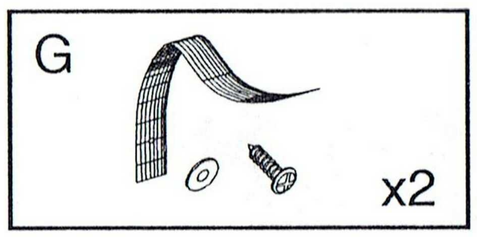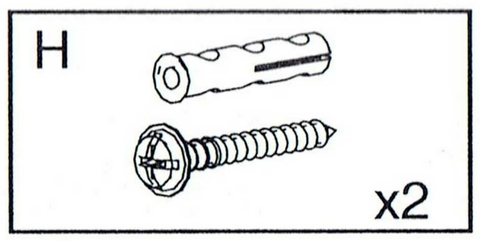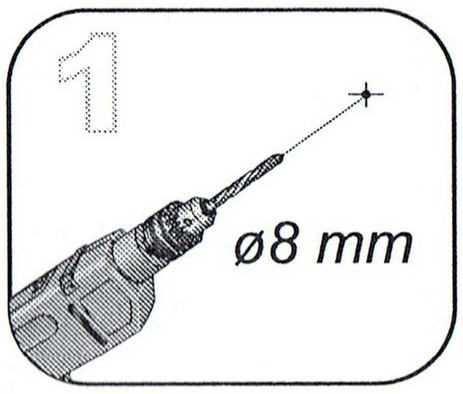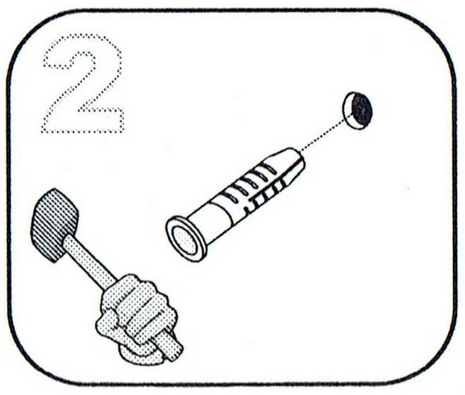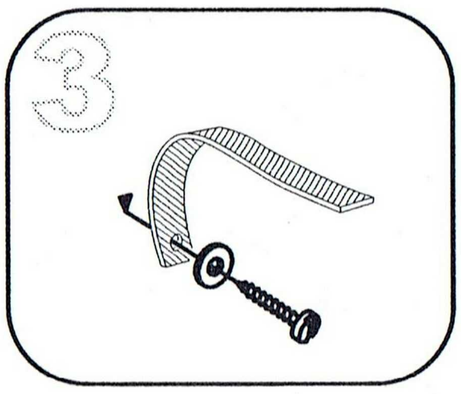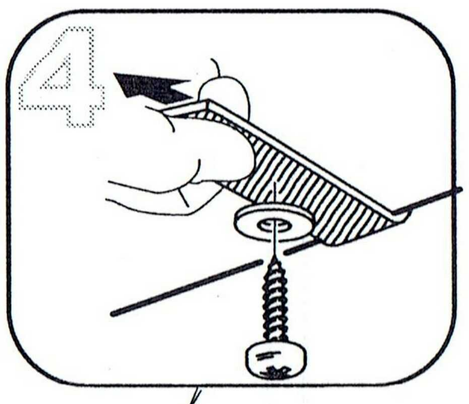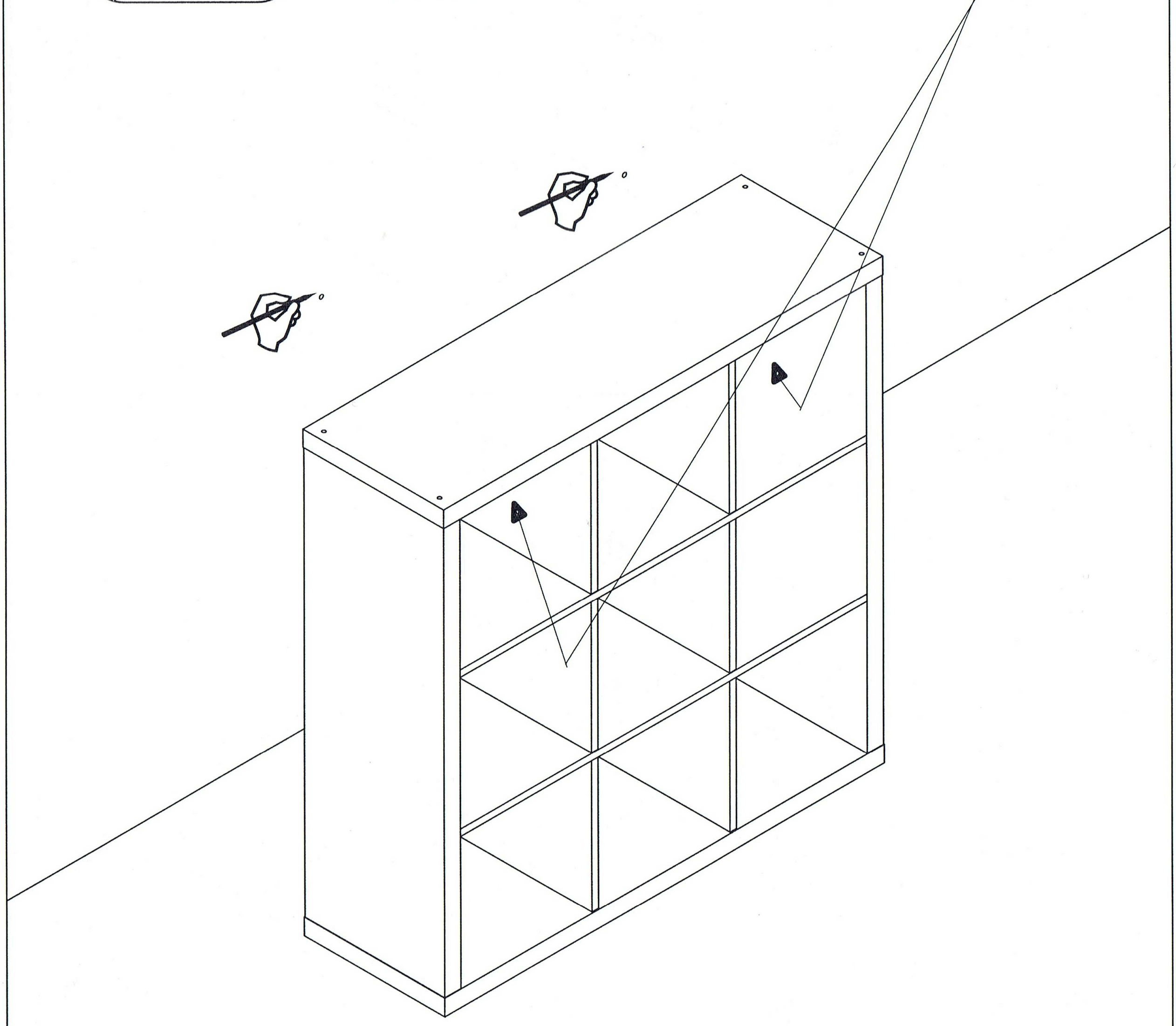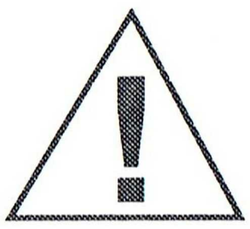
# 5