M4

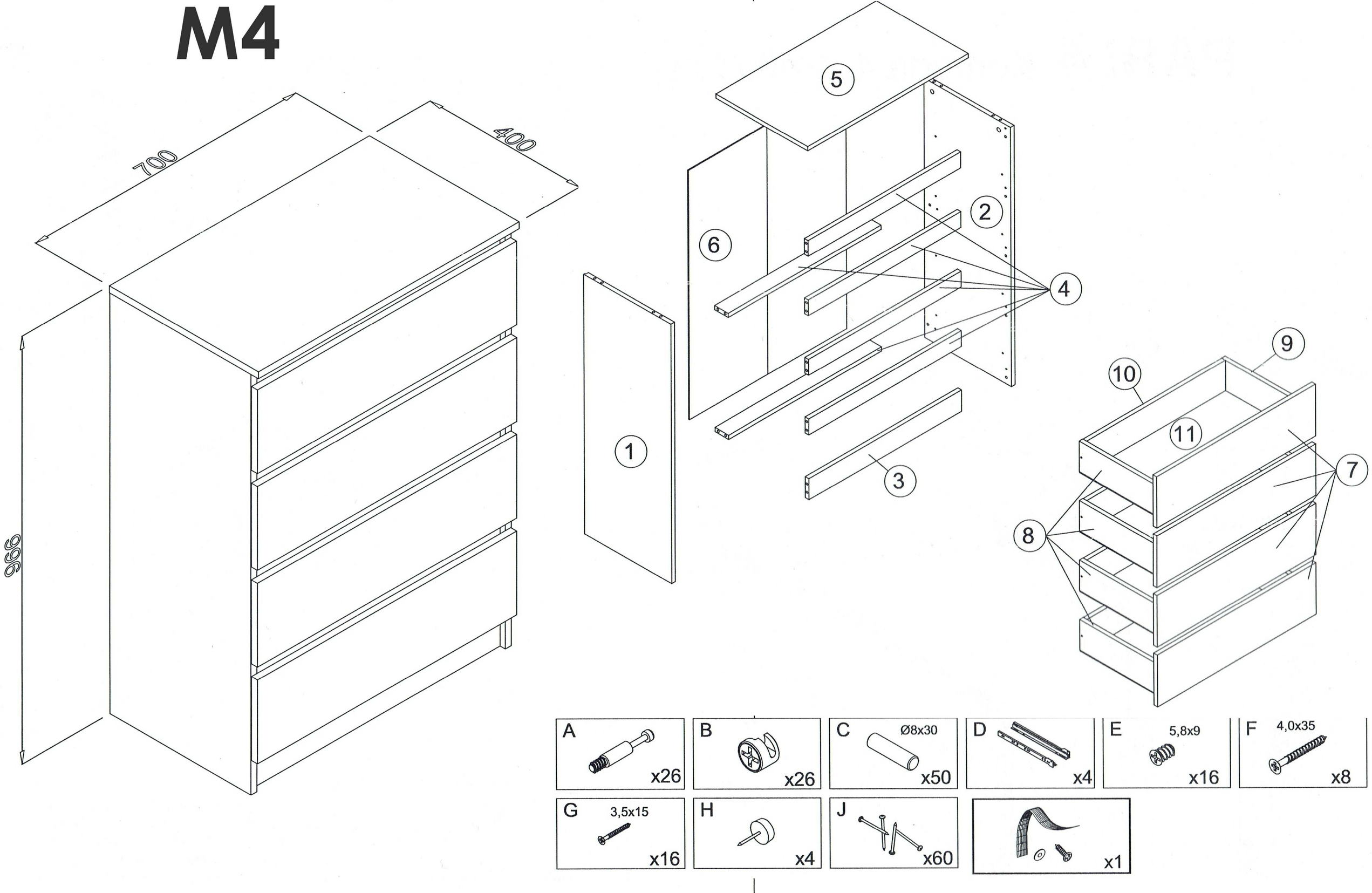
700
400
990
1
2
3
4
5
6
7
8
9
10
11
A
x26
B
x26
C
Ø8x30
x50
D
x4
E
5,8x9
x16
F
4,0x35
x8
G
3,5x15
x16
H
x4
J
x60
x1

1

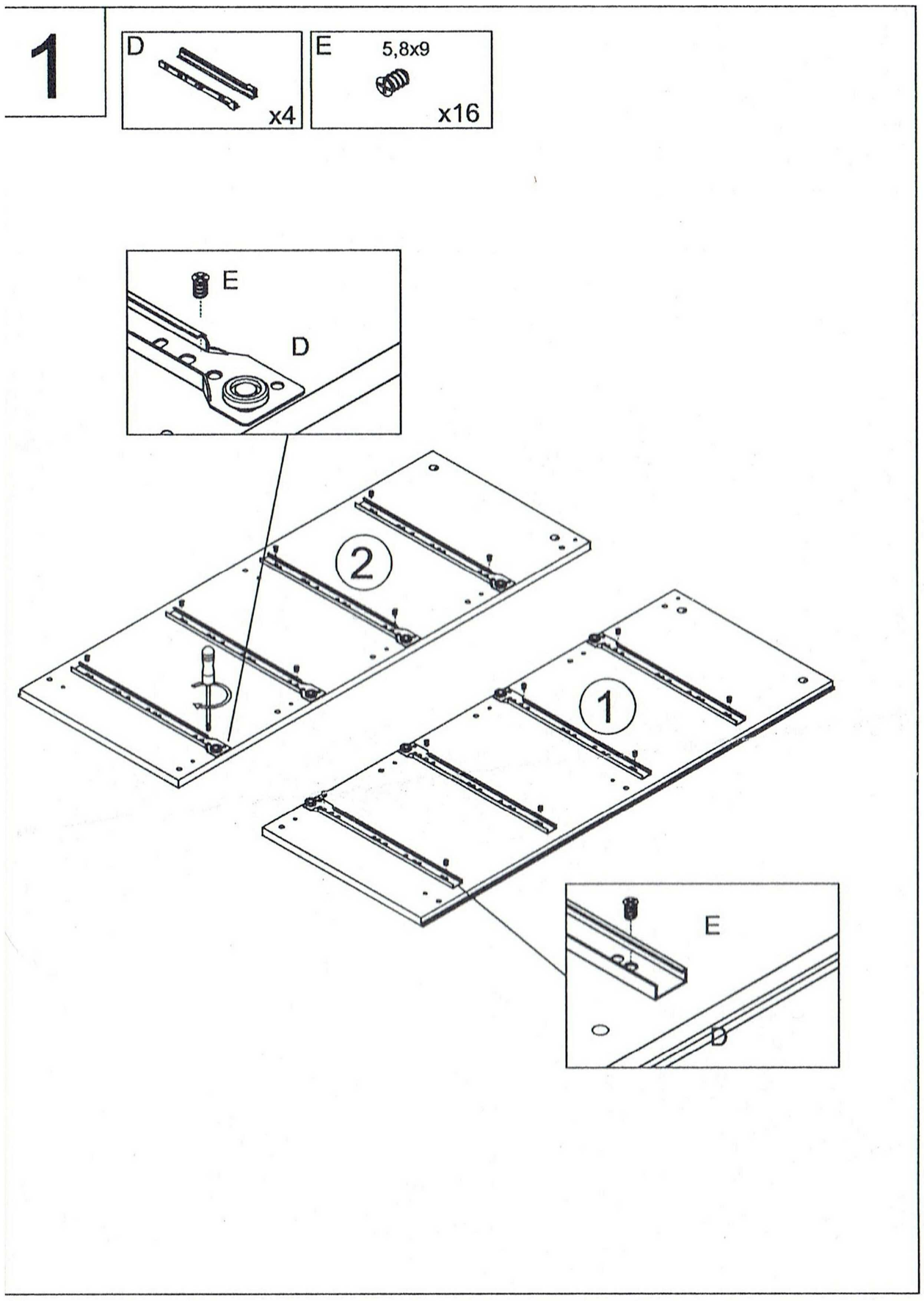
D
x4
E
5,8x9
x16
E
D
2
1
E
D

2

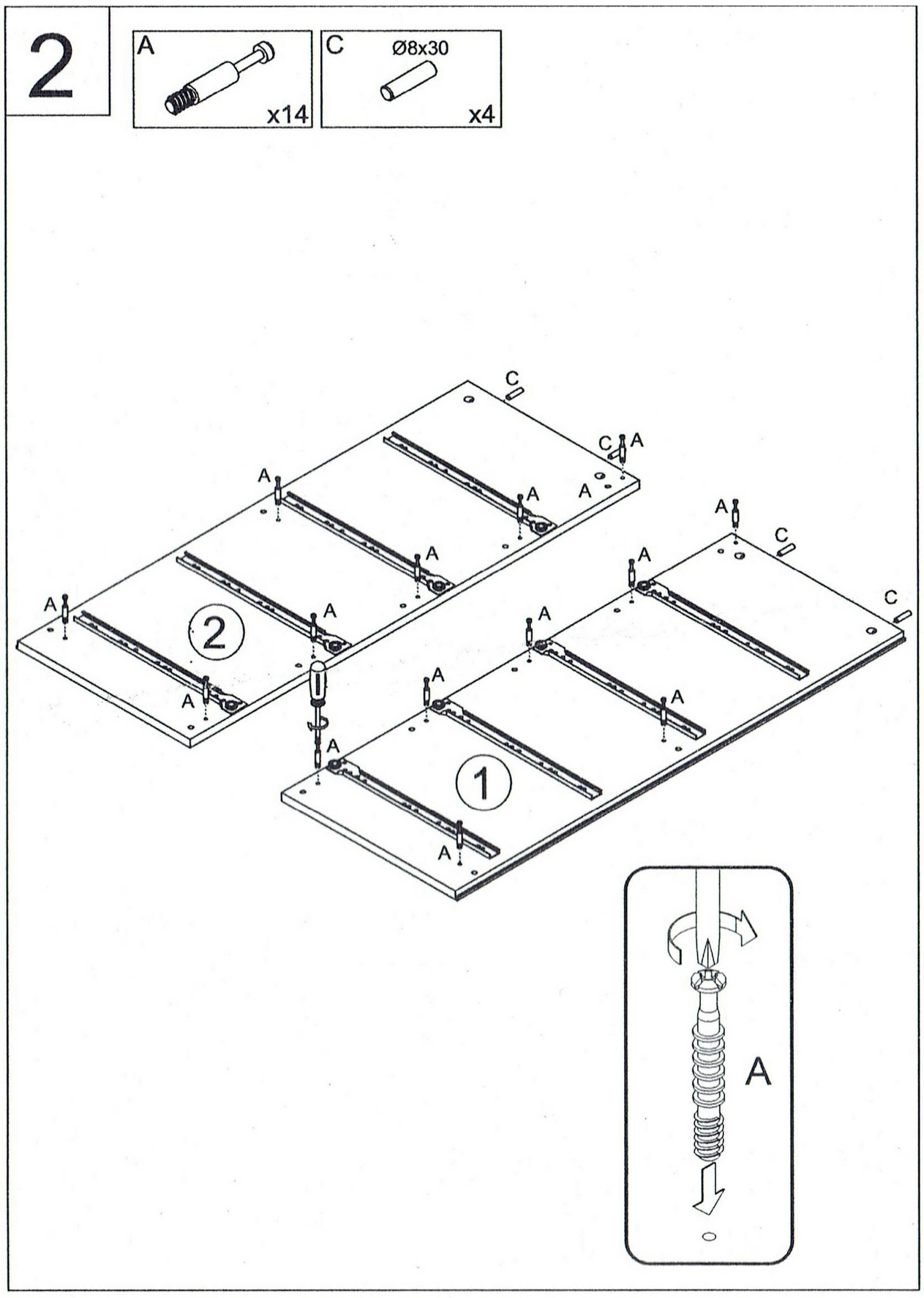
A
x14
C
Ø8x30
x4
2
1
A
C
A

3

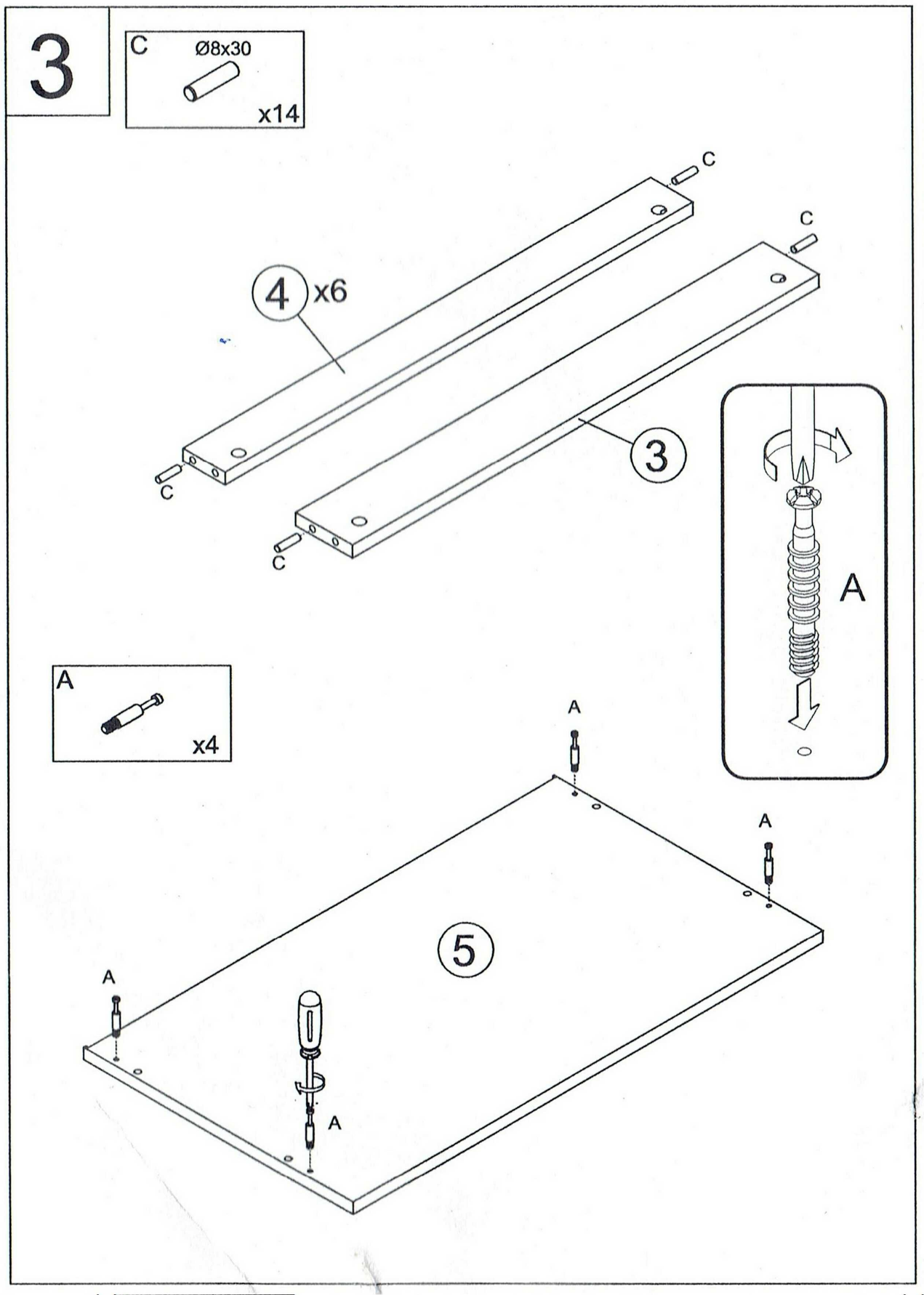
C
Ø8x30
x14
C
C
4 x6
C
C
3
A
A
x4
A
A
A
5

4

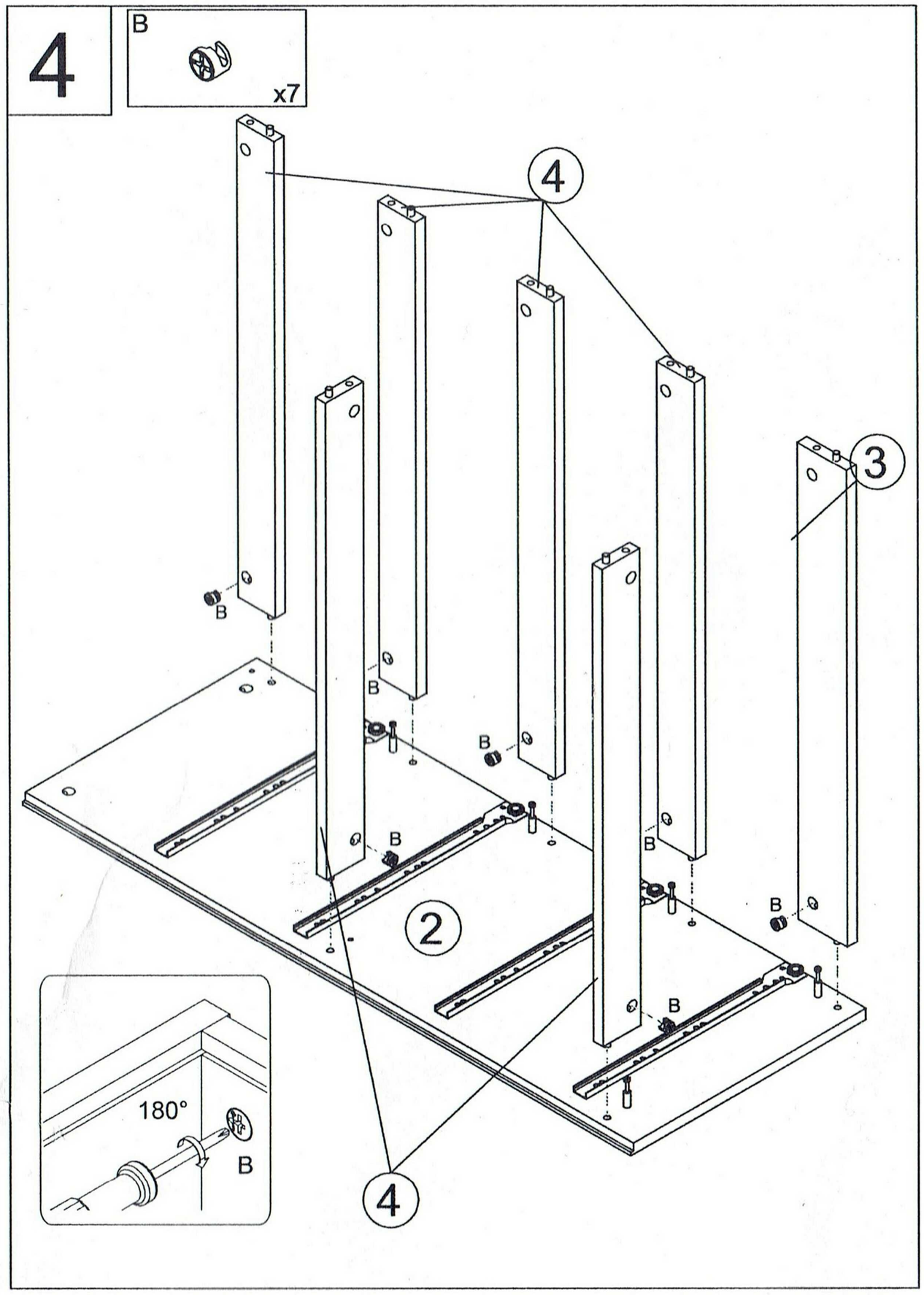
B
x7
4
3
B
B
B
B
B
B
B
2
180°
B
4

5

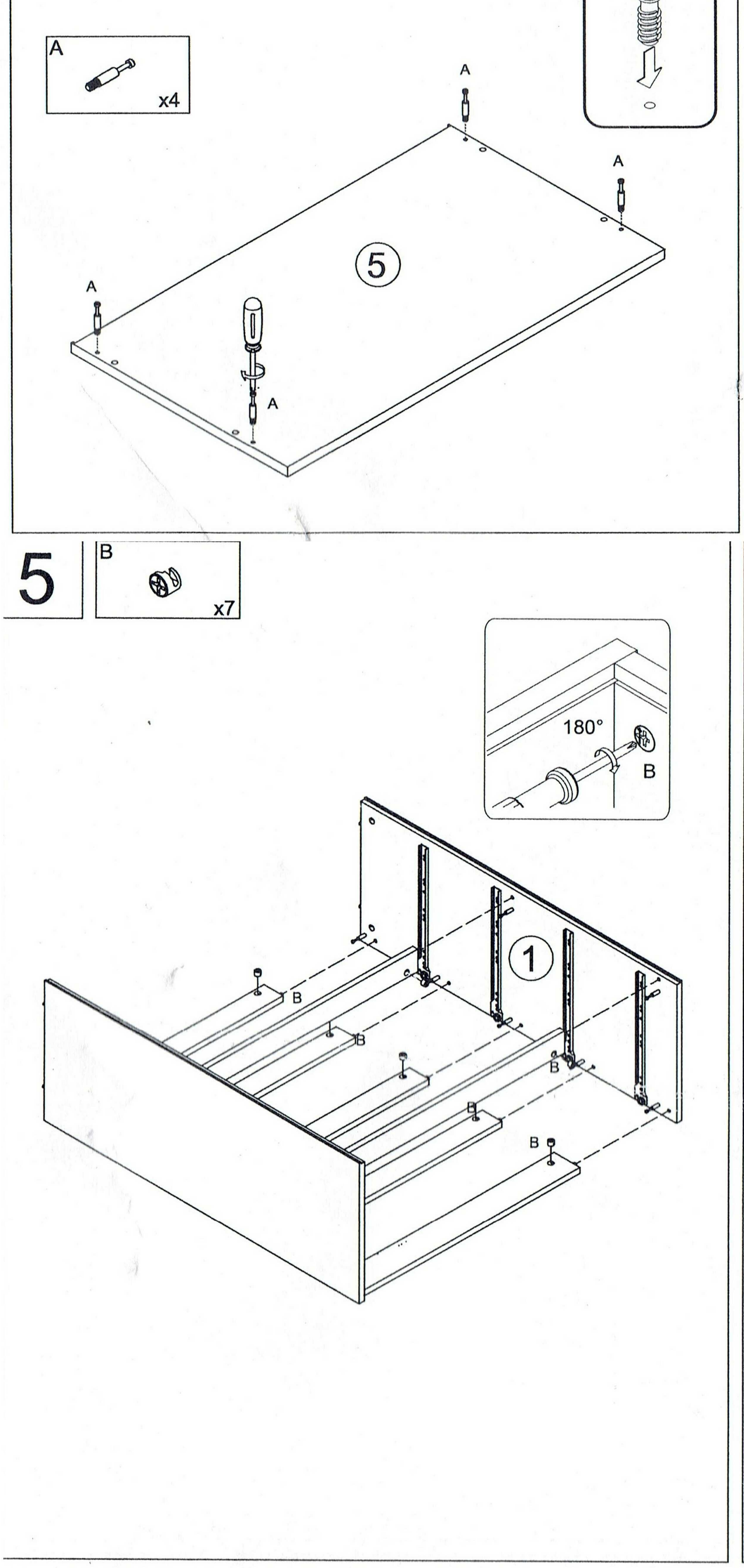
B
x7
180°
B
1
B
B
B
B
B

6

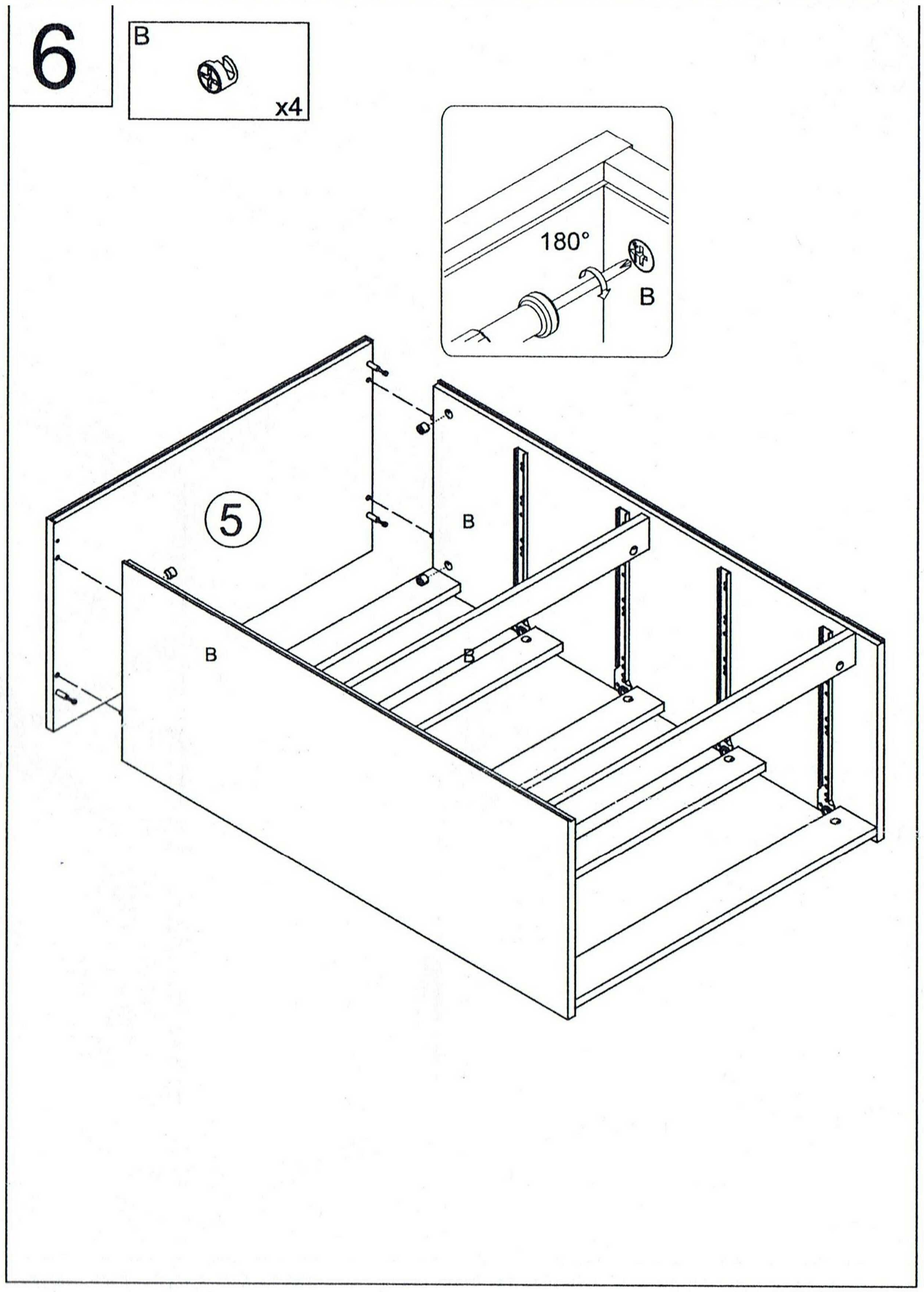
B
x4
180°
B
5
B
B
B

7

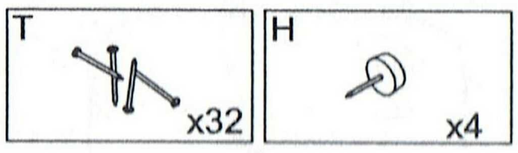
T
x32
H
x4

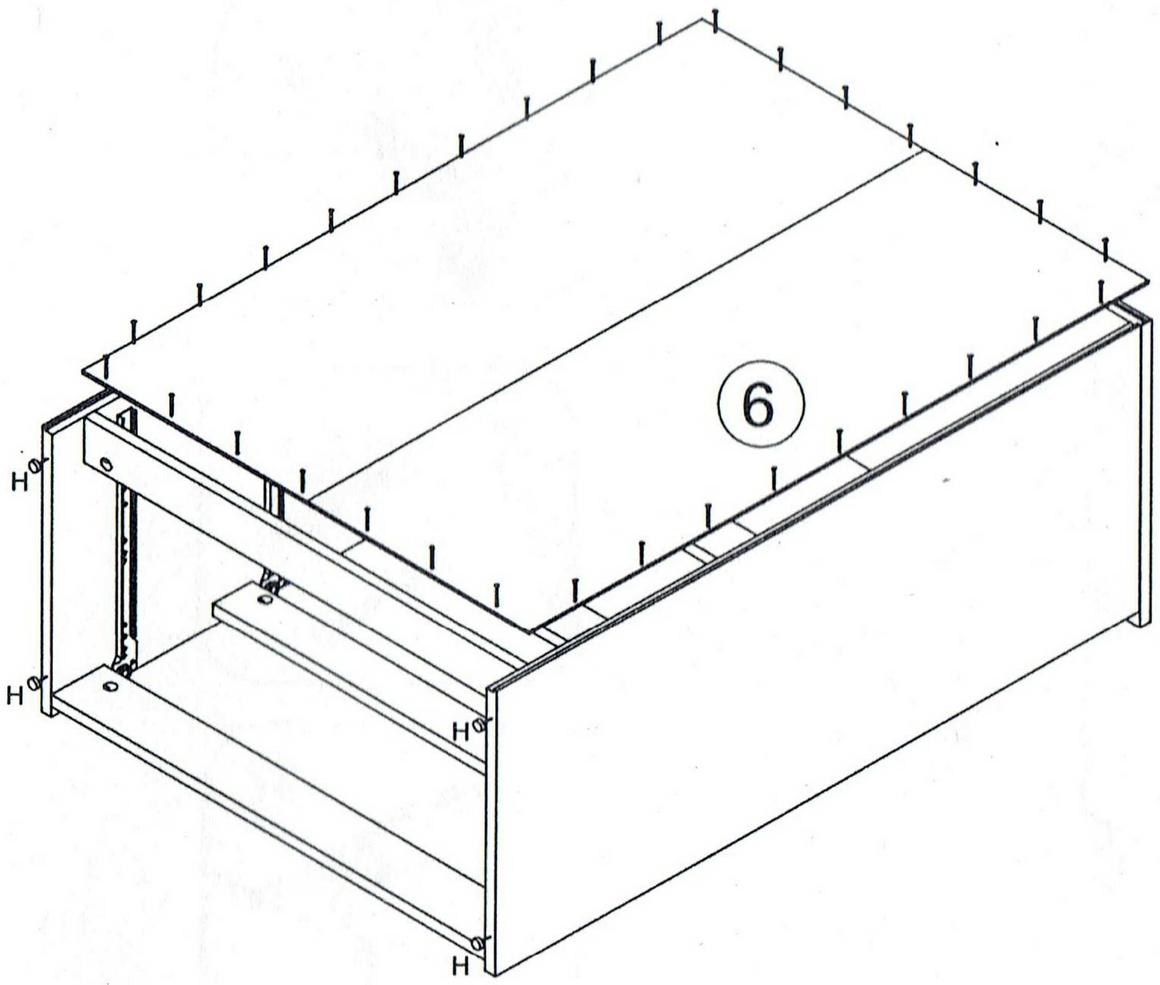
6
H
H
H
H

8

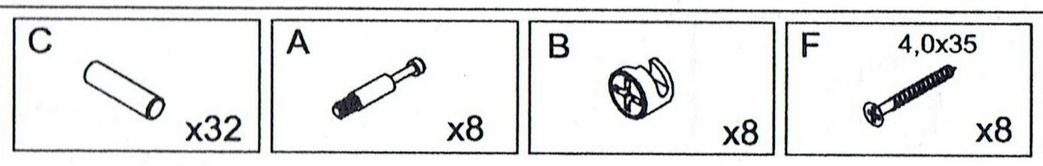
C
x32
A
x8
B
x8
F
4,0x35
x8

x4

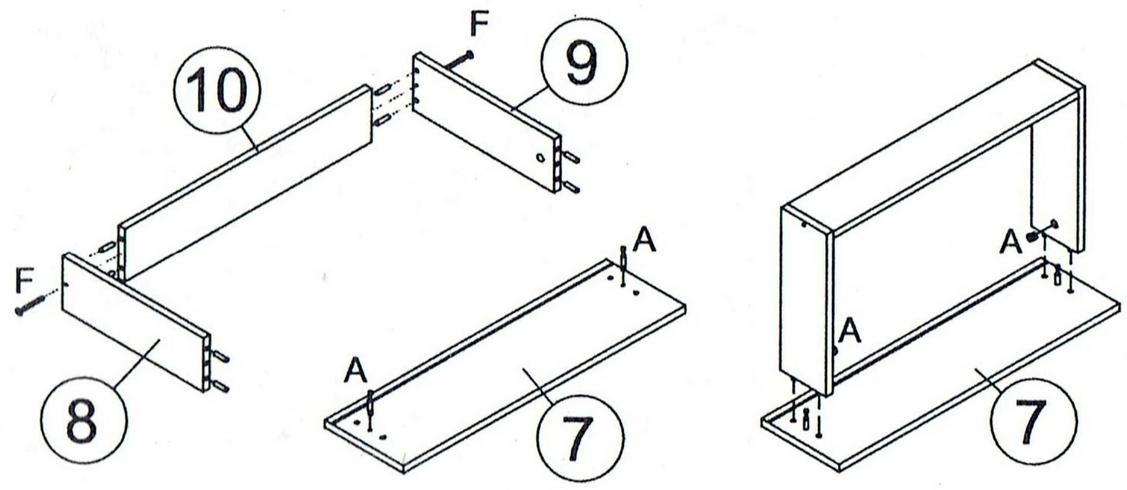
F
10
9
F
8
A
A
7
A
A
7

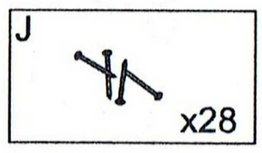
J
x28

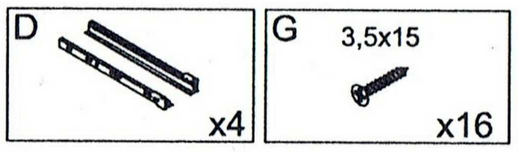
D
x4
G
3,5x15
x16

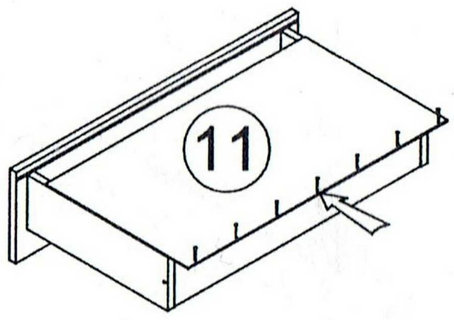
11

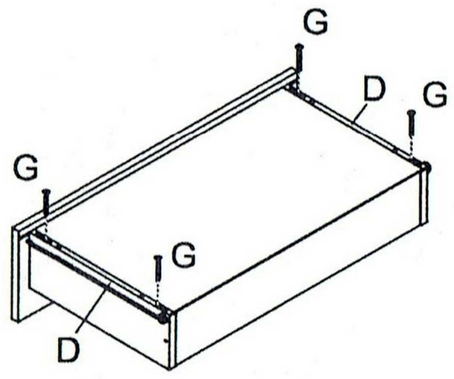
G
D
G
G
G
D

9

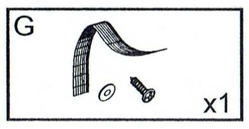
G
x1

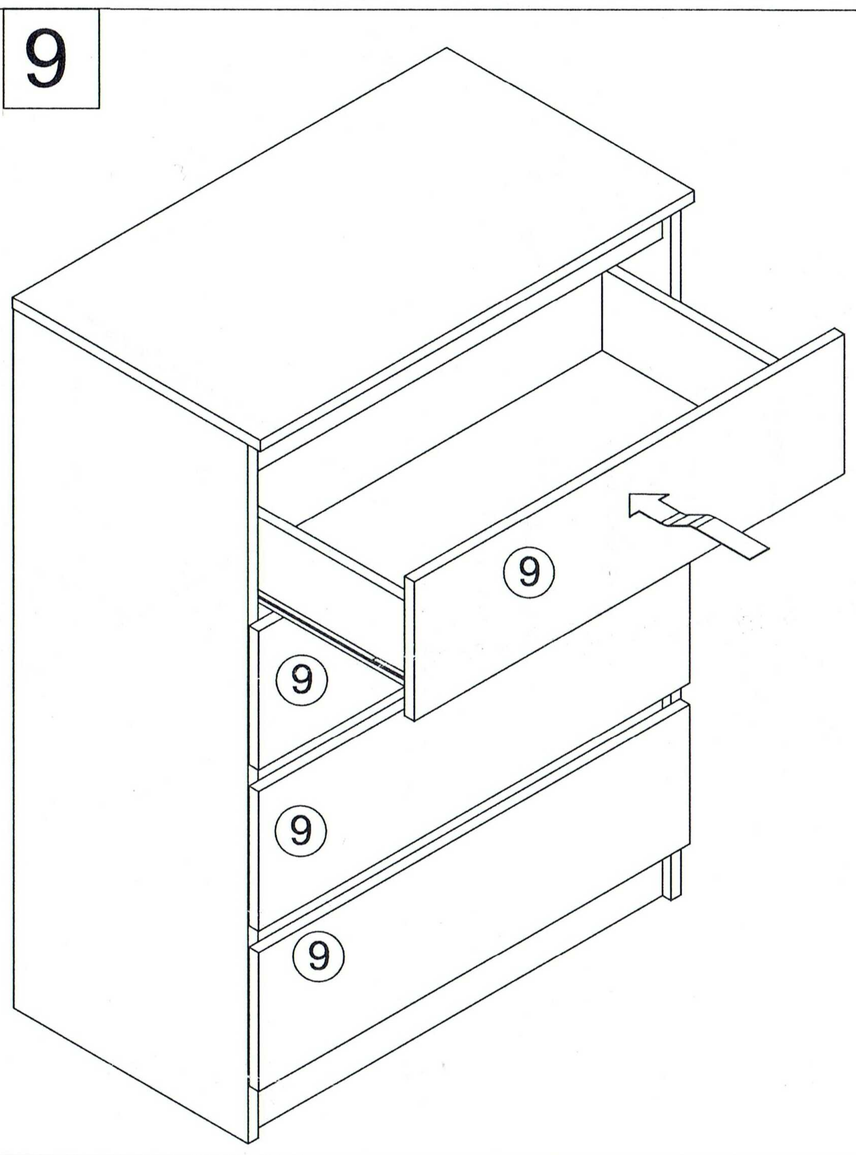
9
9
9
9

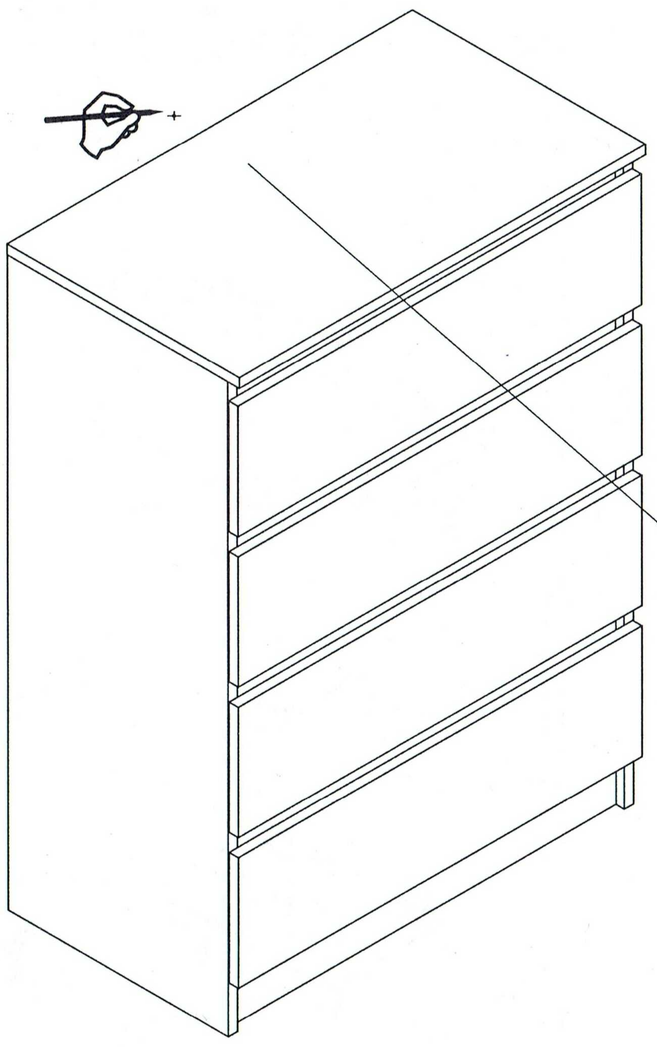

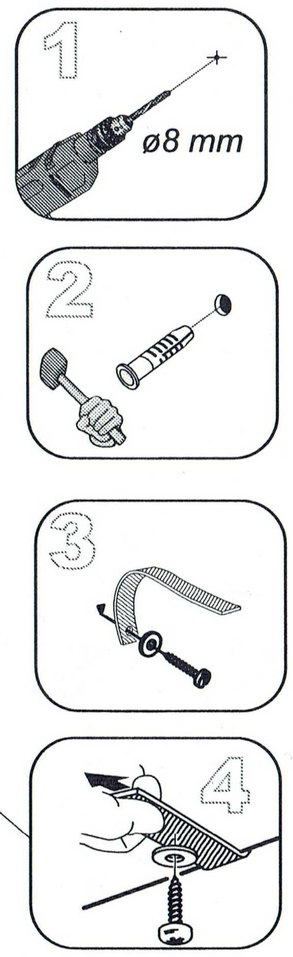
1
ø8 mm
2
3
4