M5

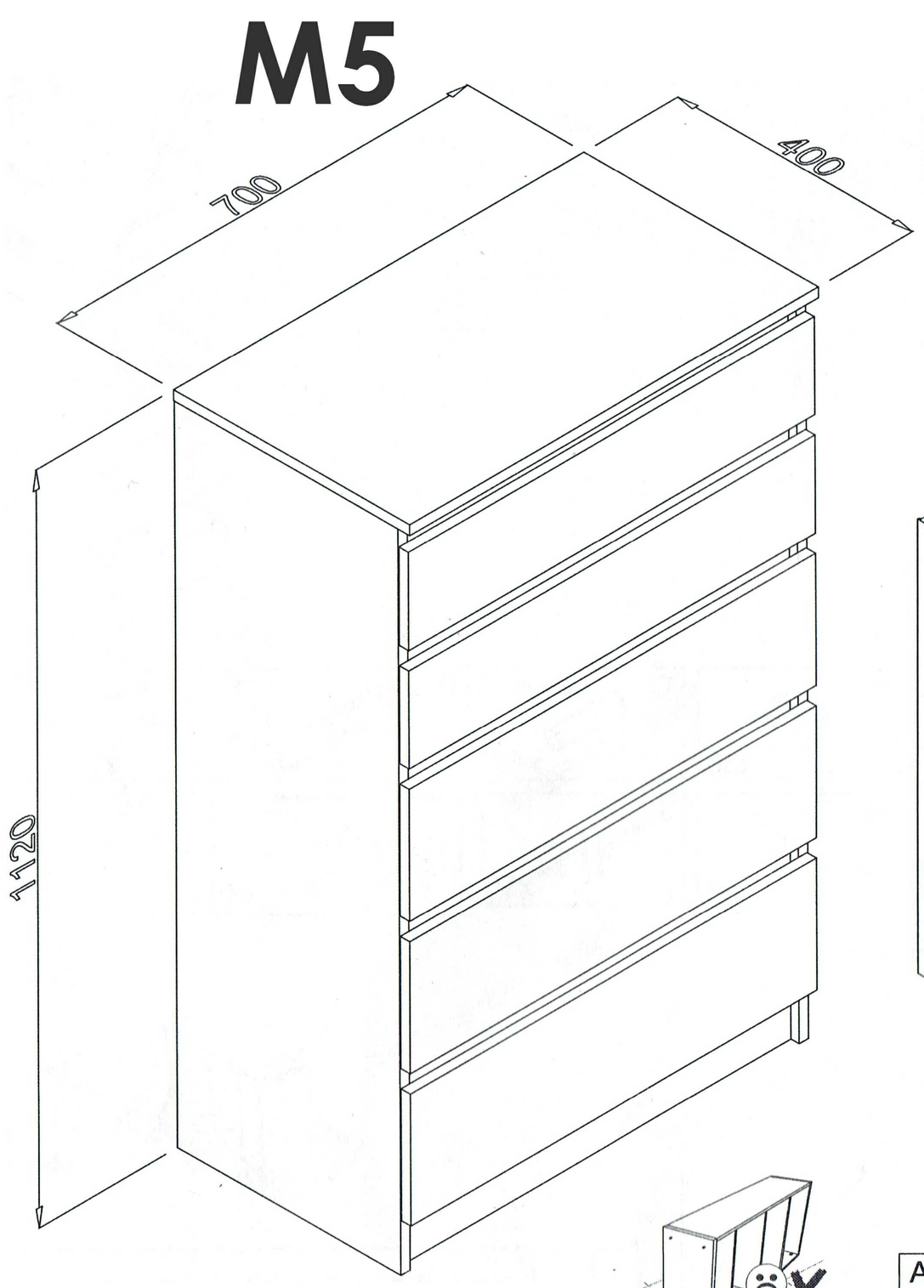
700
400
1120

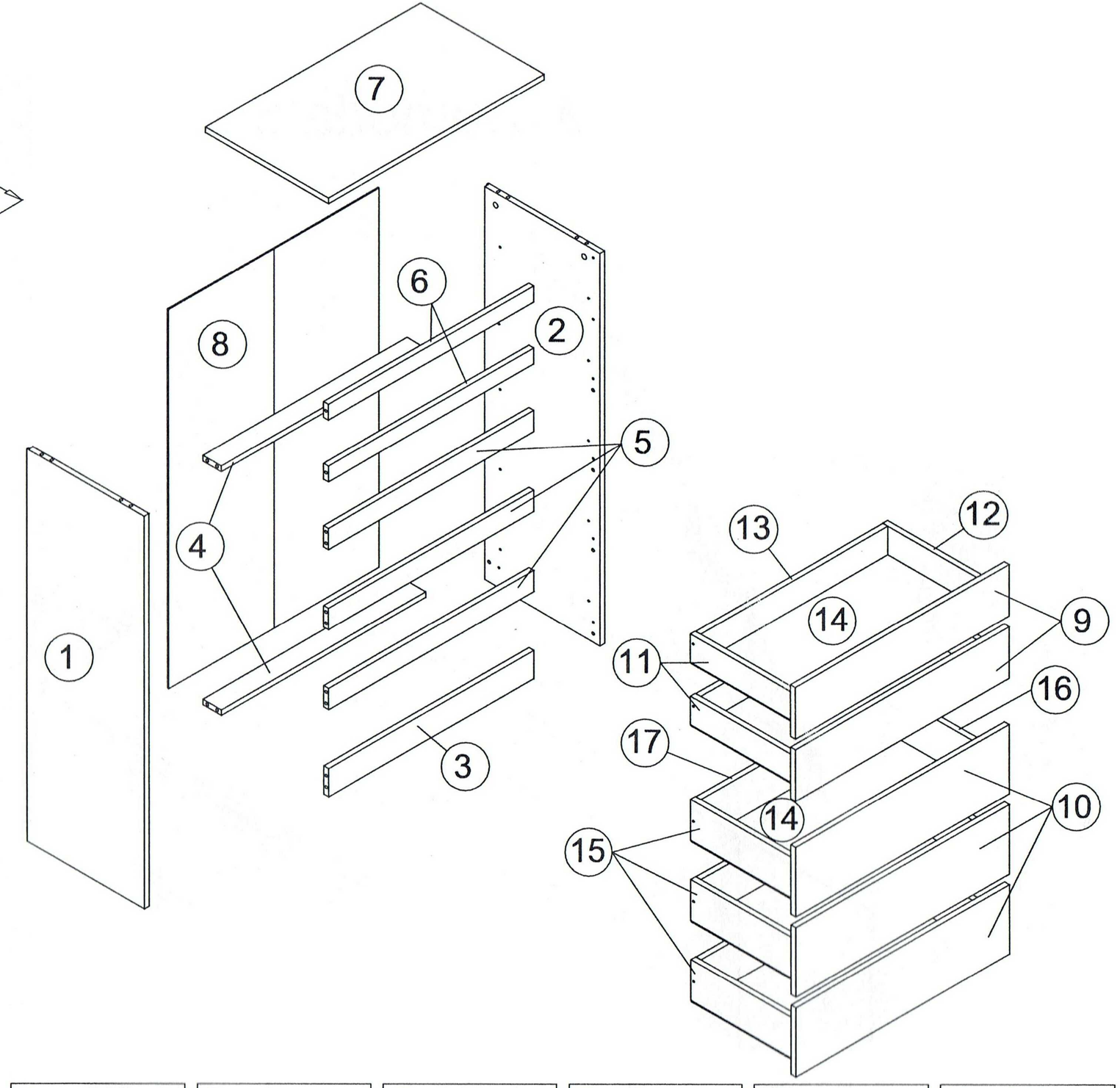
7
8
6
2
5
4
1
3
13
12
14
9
11
16
17
14
10
15

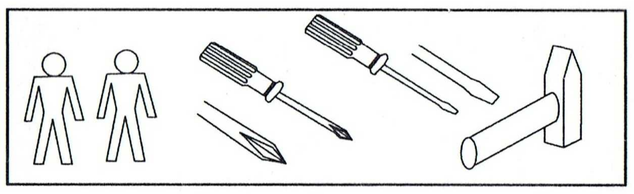

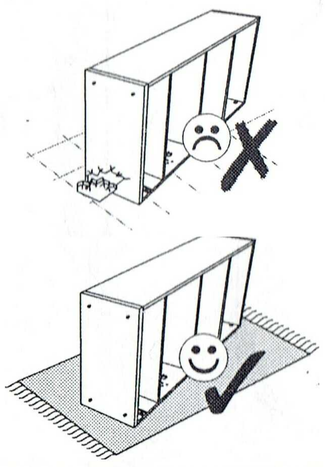

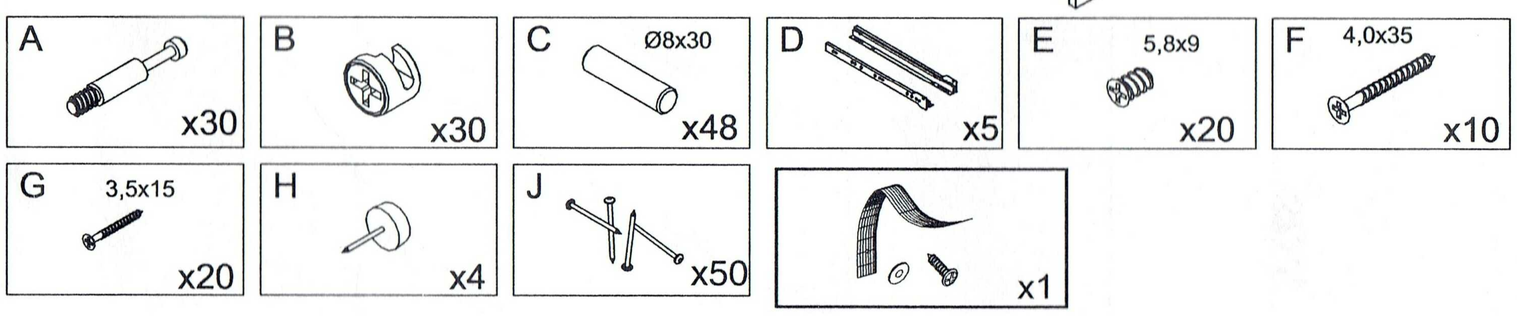
A x30
B x30
C Ø8x30 x48
D x5
E 5,8x9 x20
F 4,0x35 x10
G 3,5x15 x20
H x4
J x50
x1

1

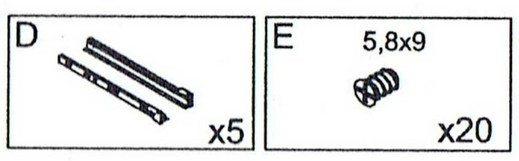
D x5
E 5,8x9 x20

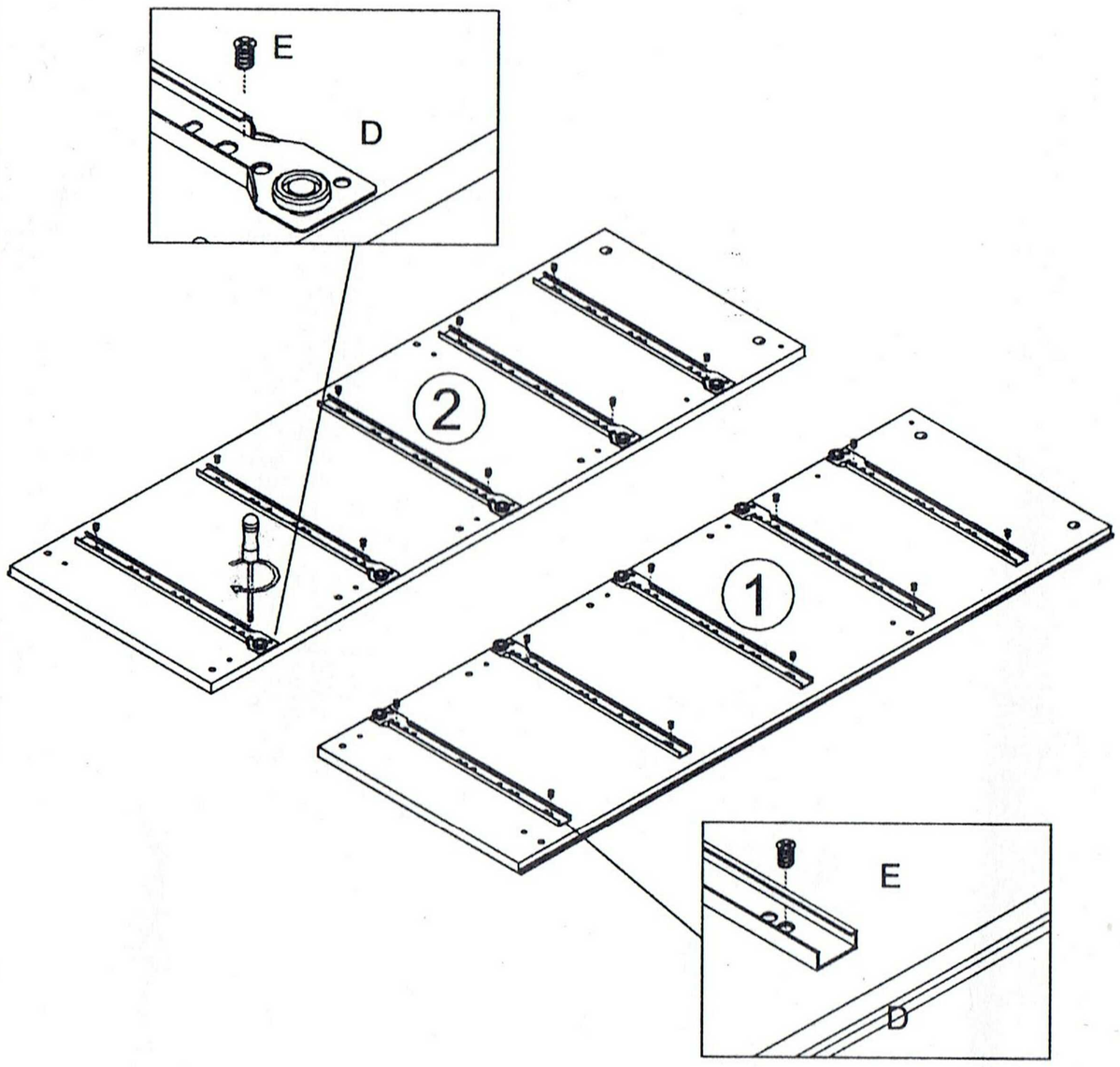
E
D
2
1
E
D

2

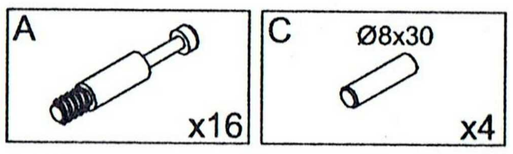
A x16
C Ø8x30 x4

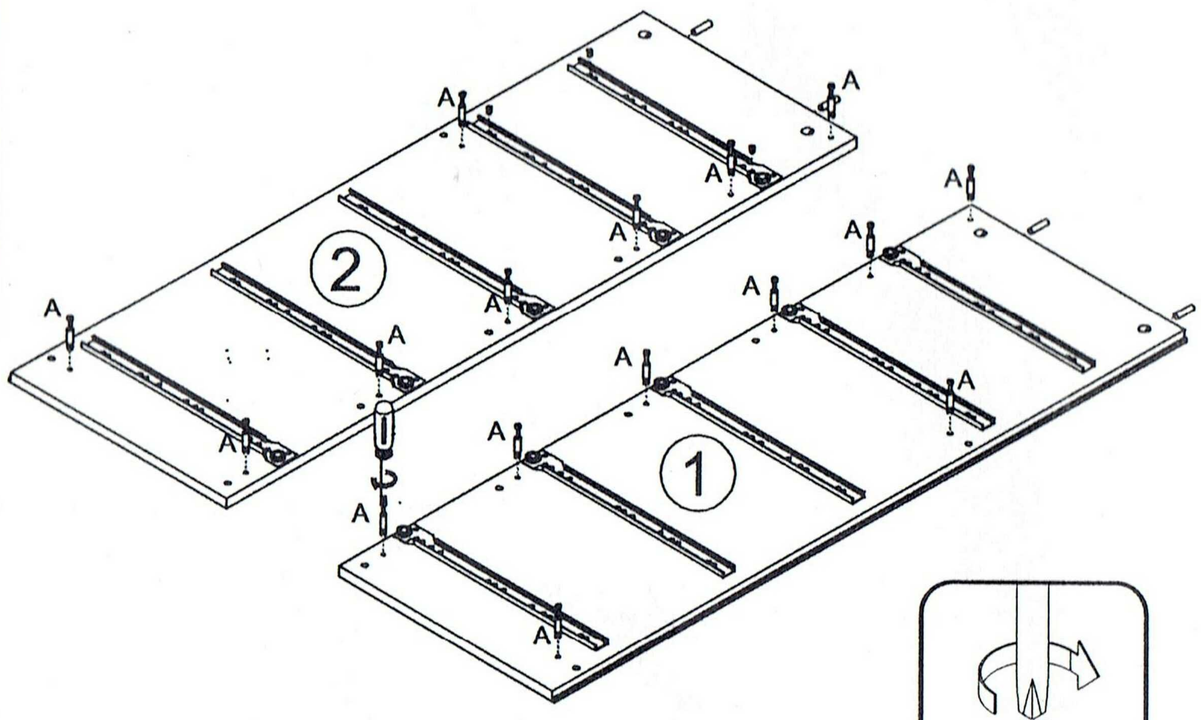
A
2
1

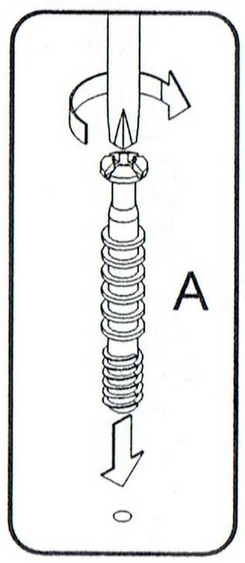
A

3

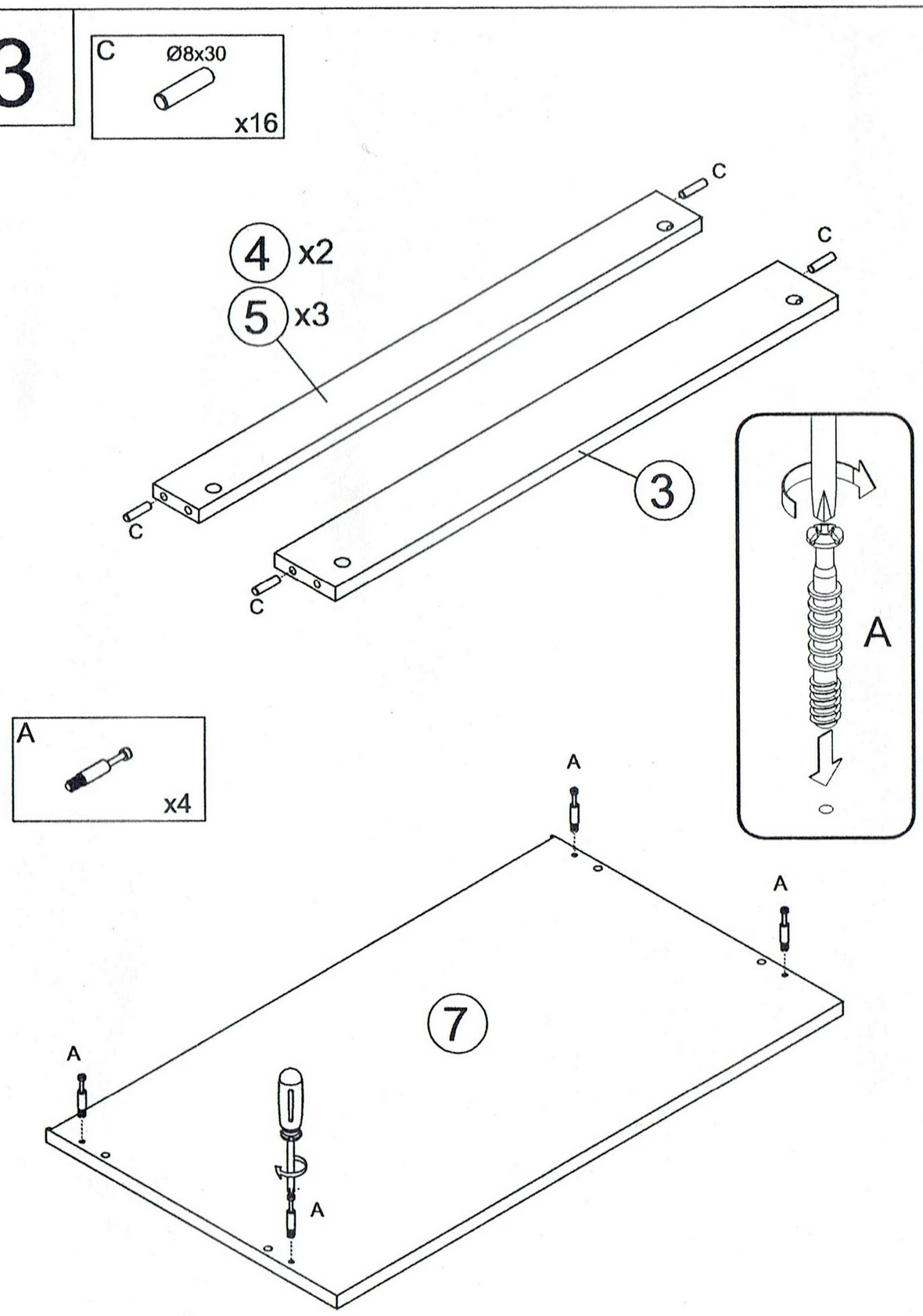

4

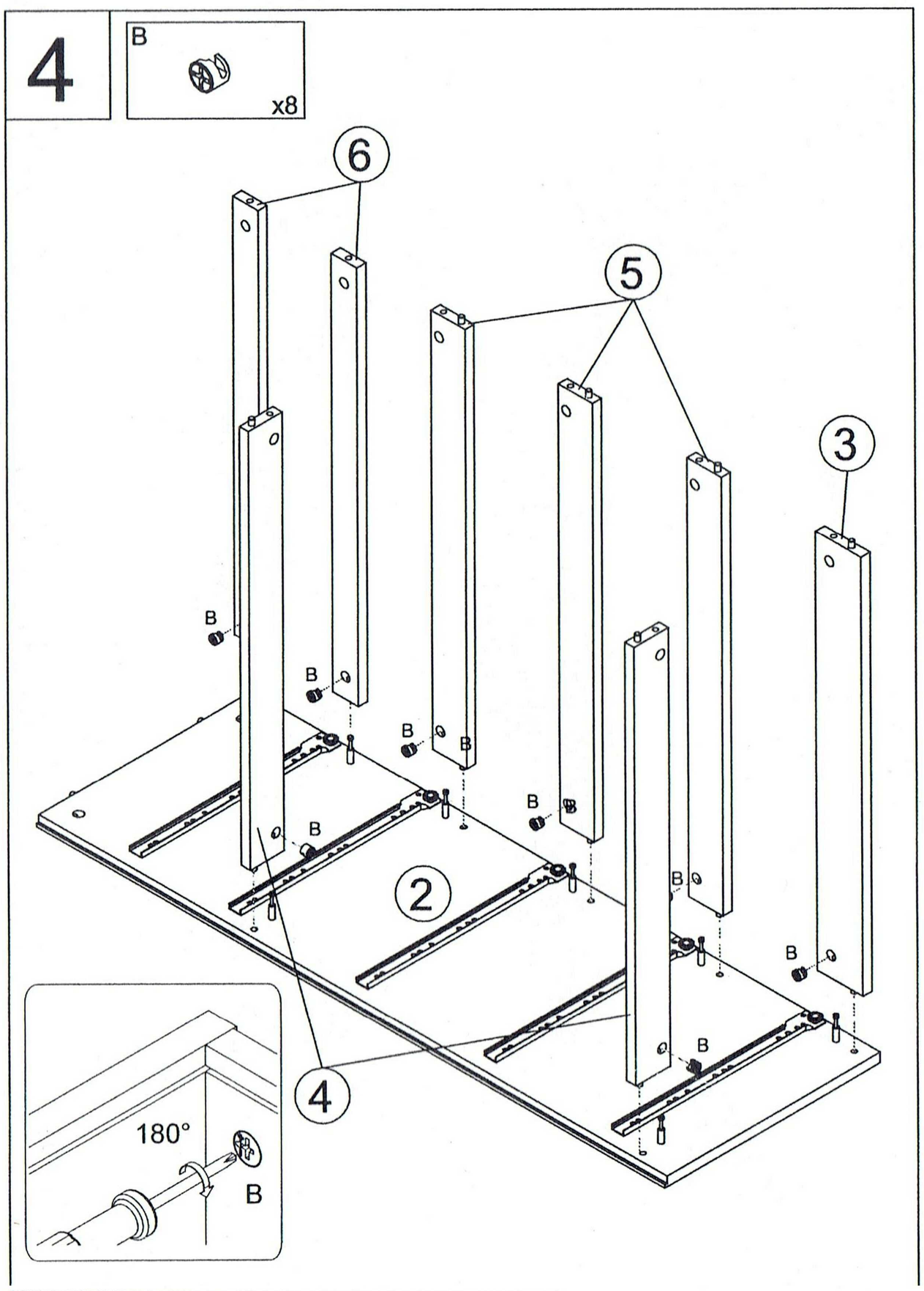

5

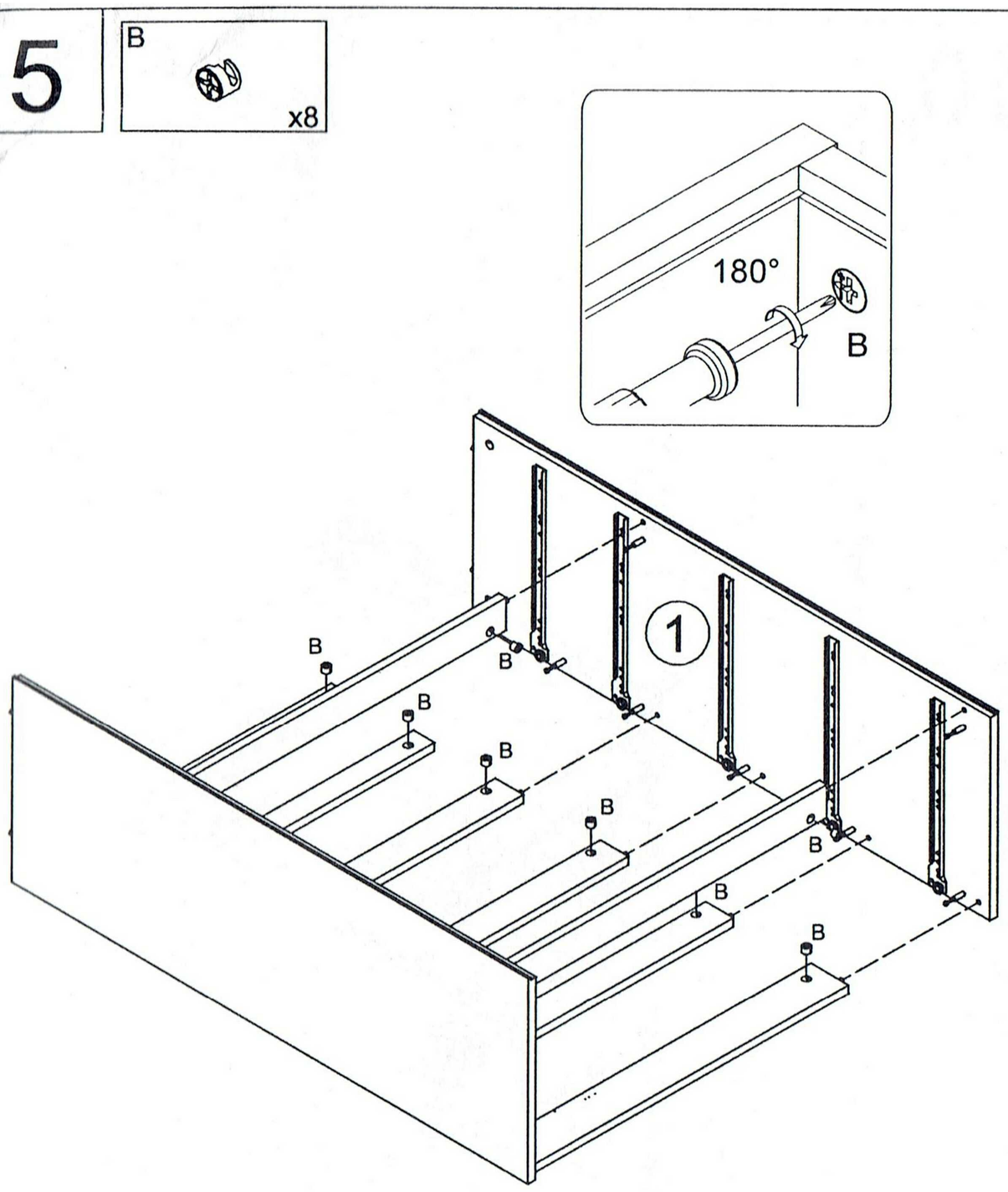

6

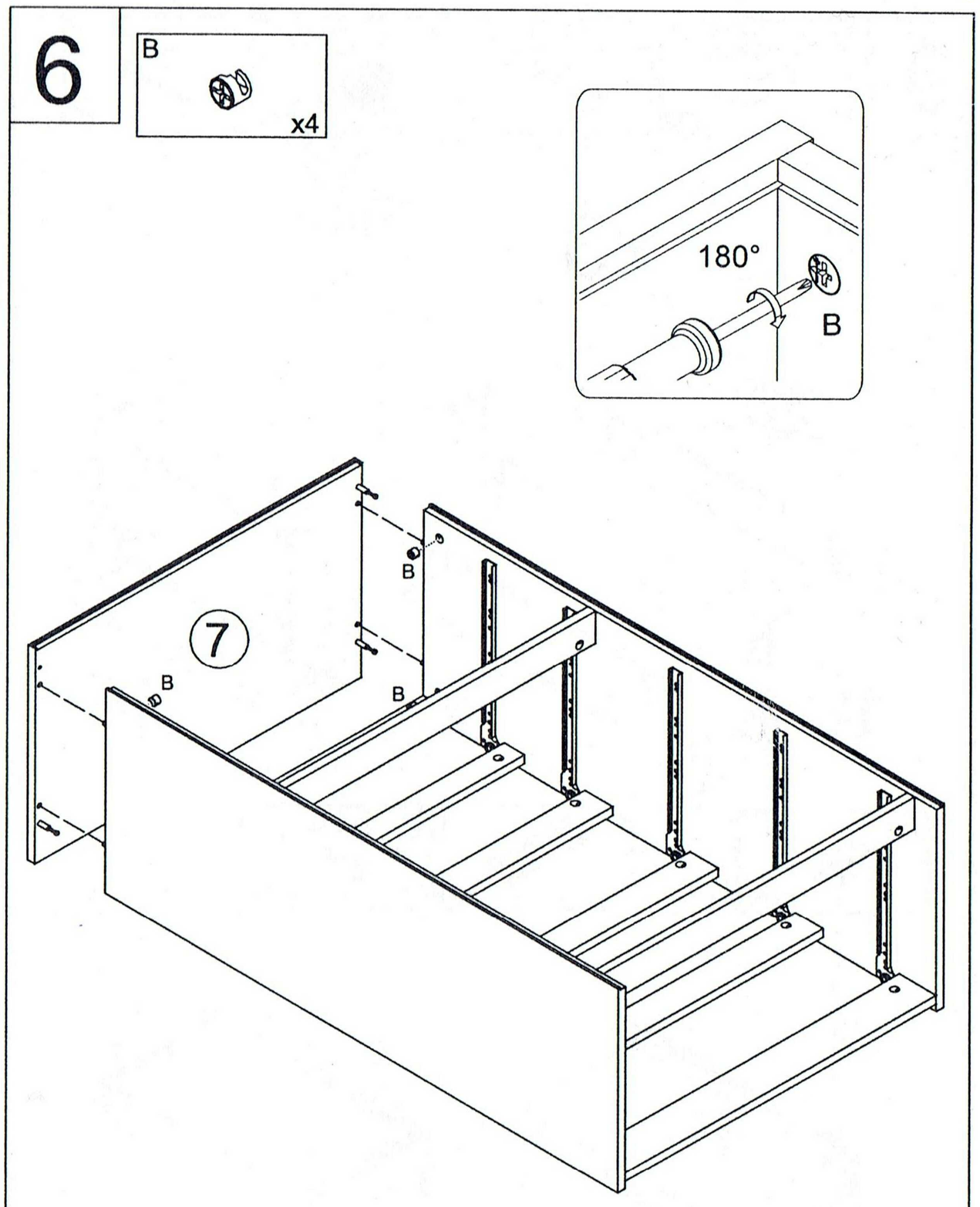

7

T x35

H x4

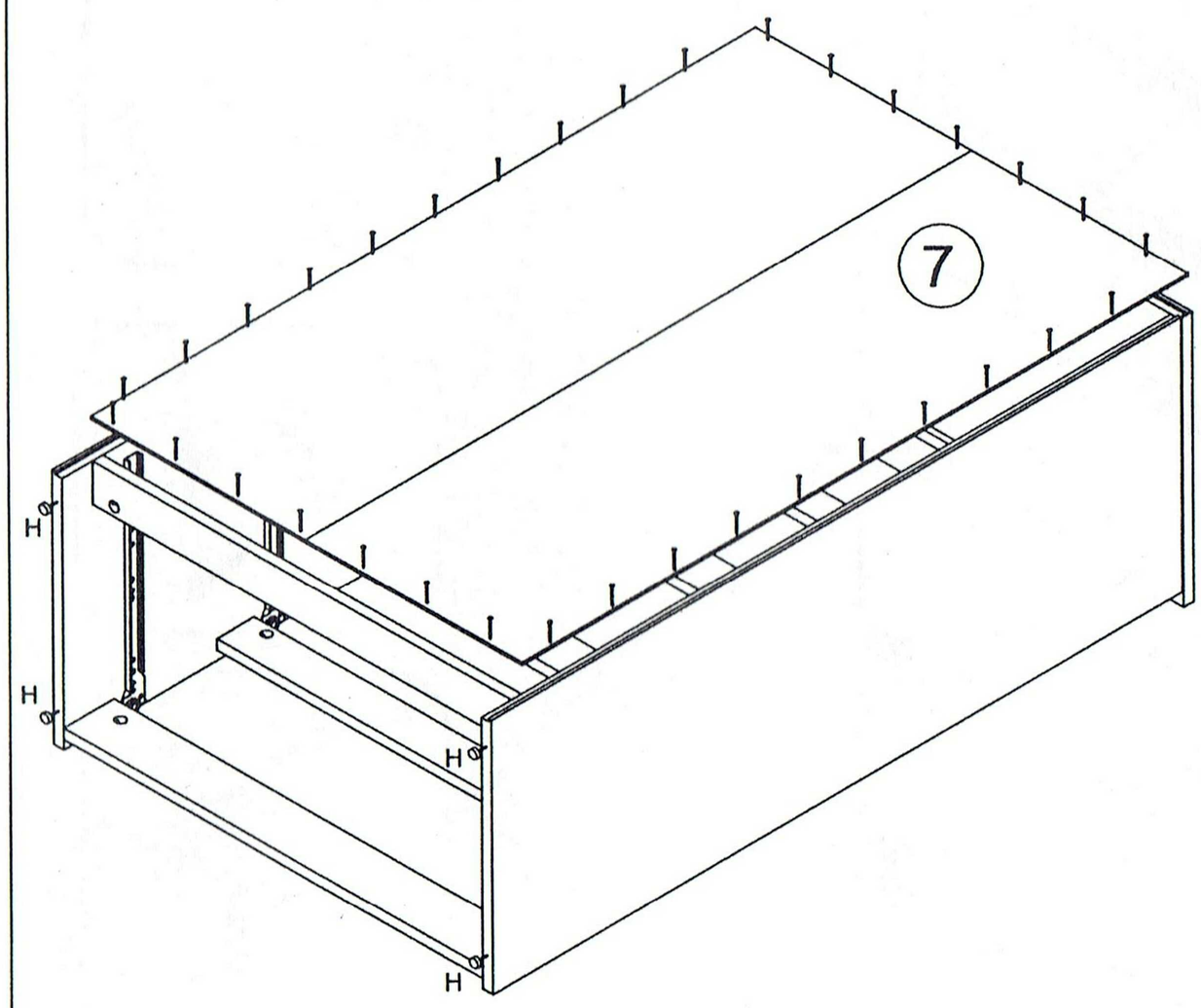

8

C Ø8x30 x8

A x4

B x4

F 4,0x35 x4

x2

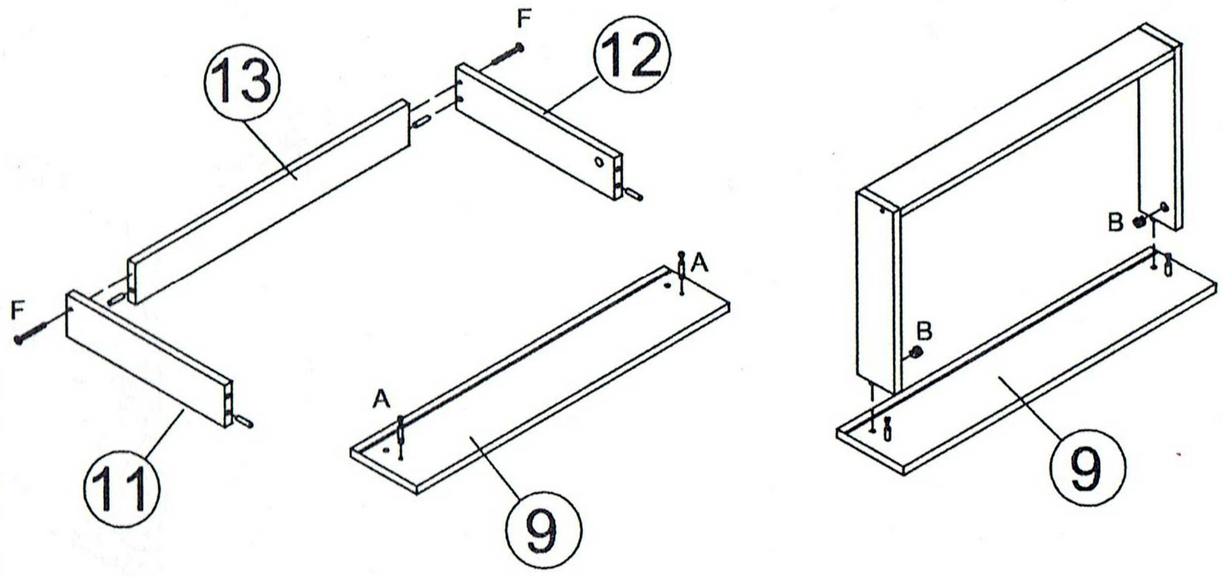

J x14

D x2

G 3,5x15 x8

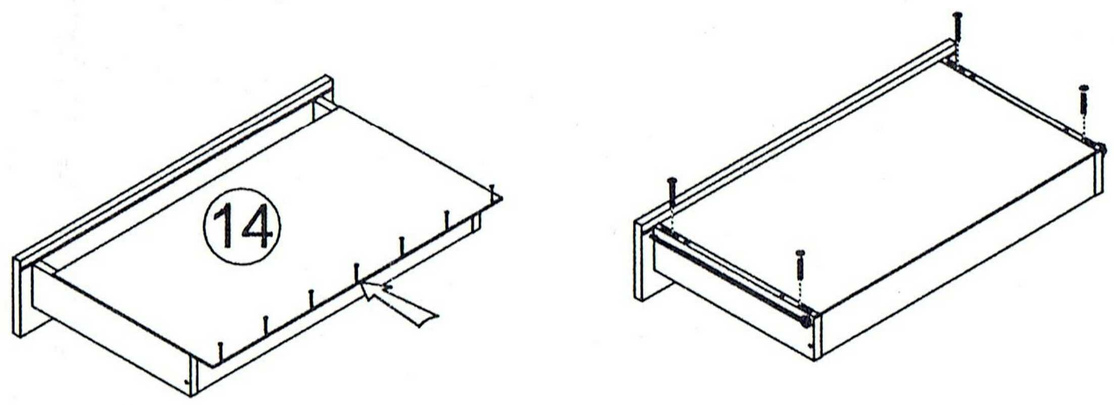

9

C Ø8x30 x24

A x6

B x6

F 4,0x35 x6

x3

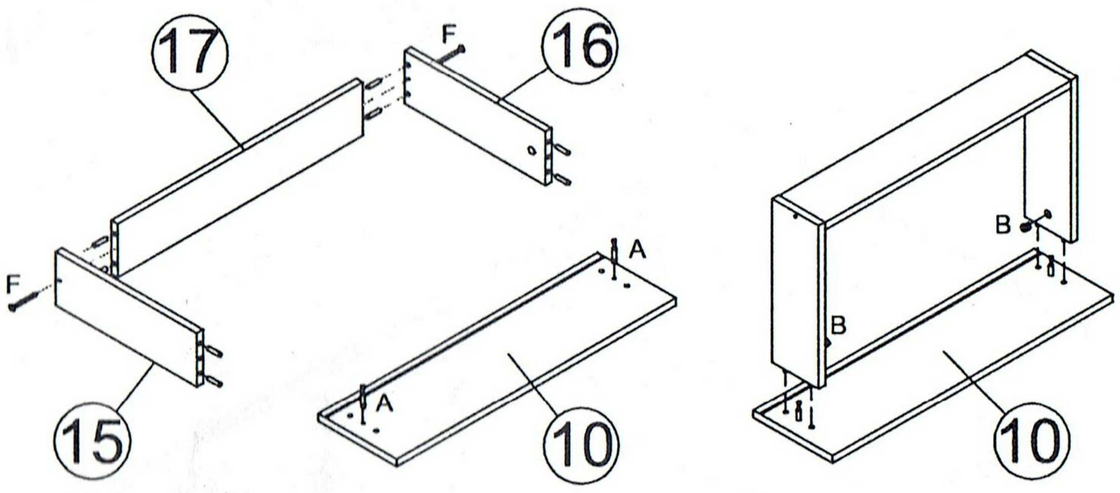

J x28

D x4

G 3,5x15 x16

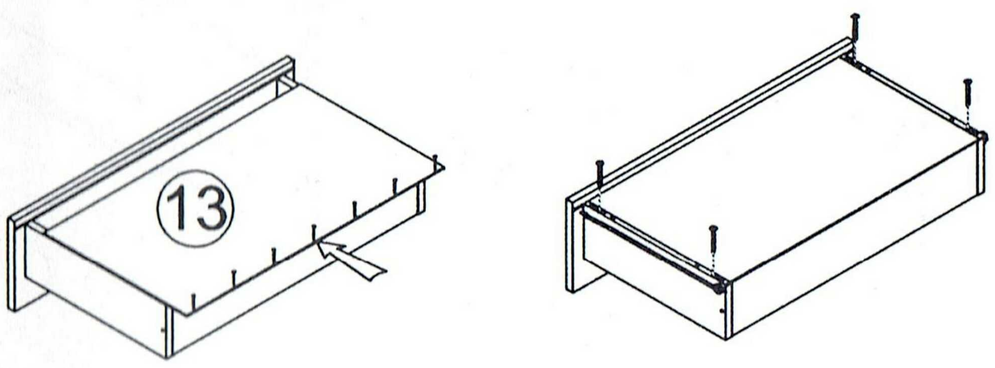
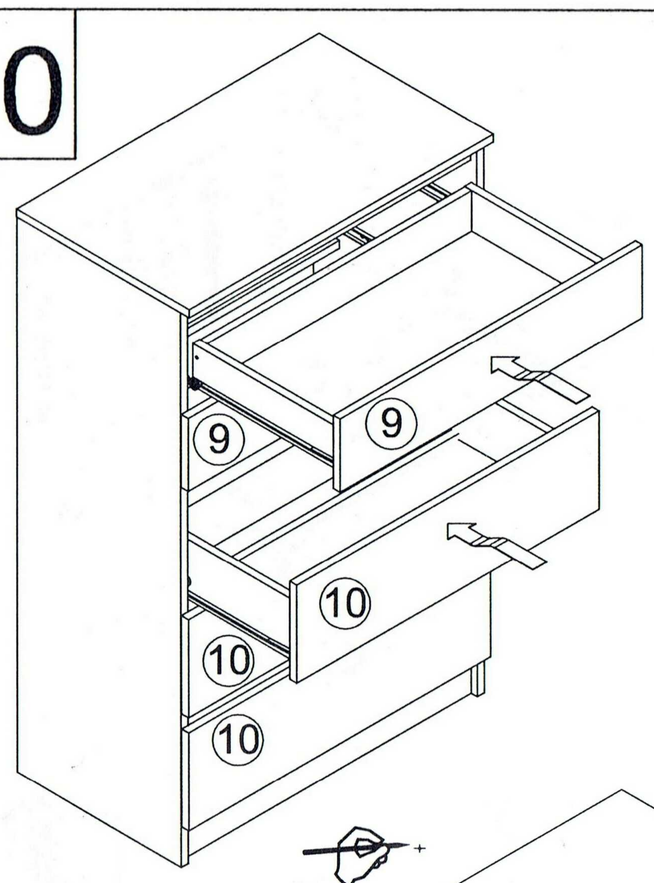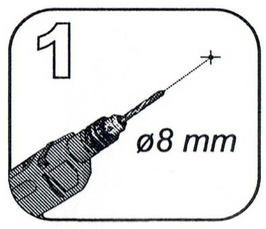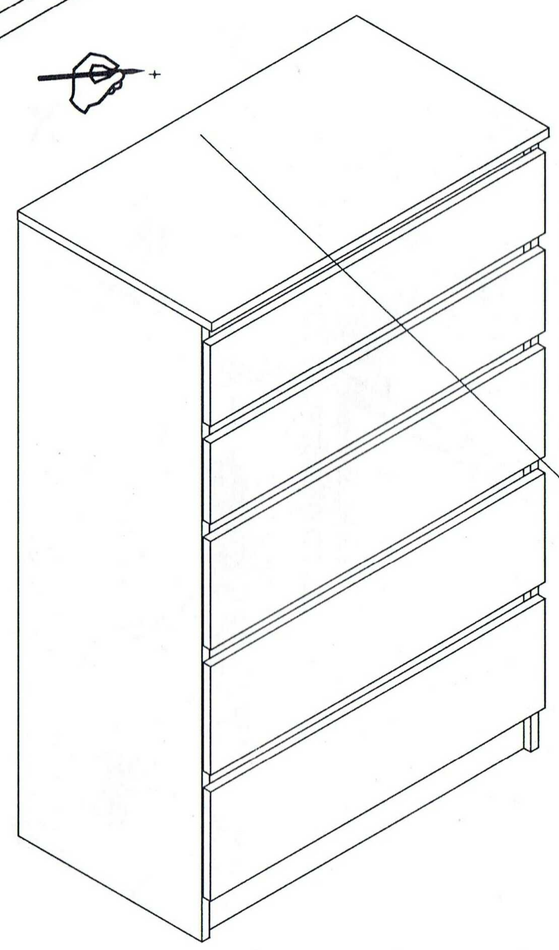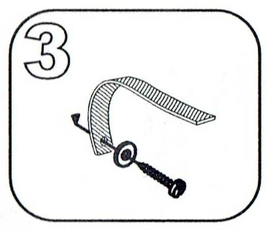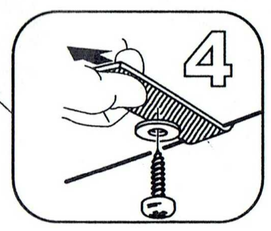
10