K2

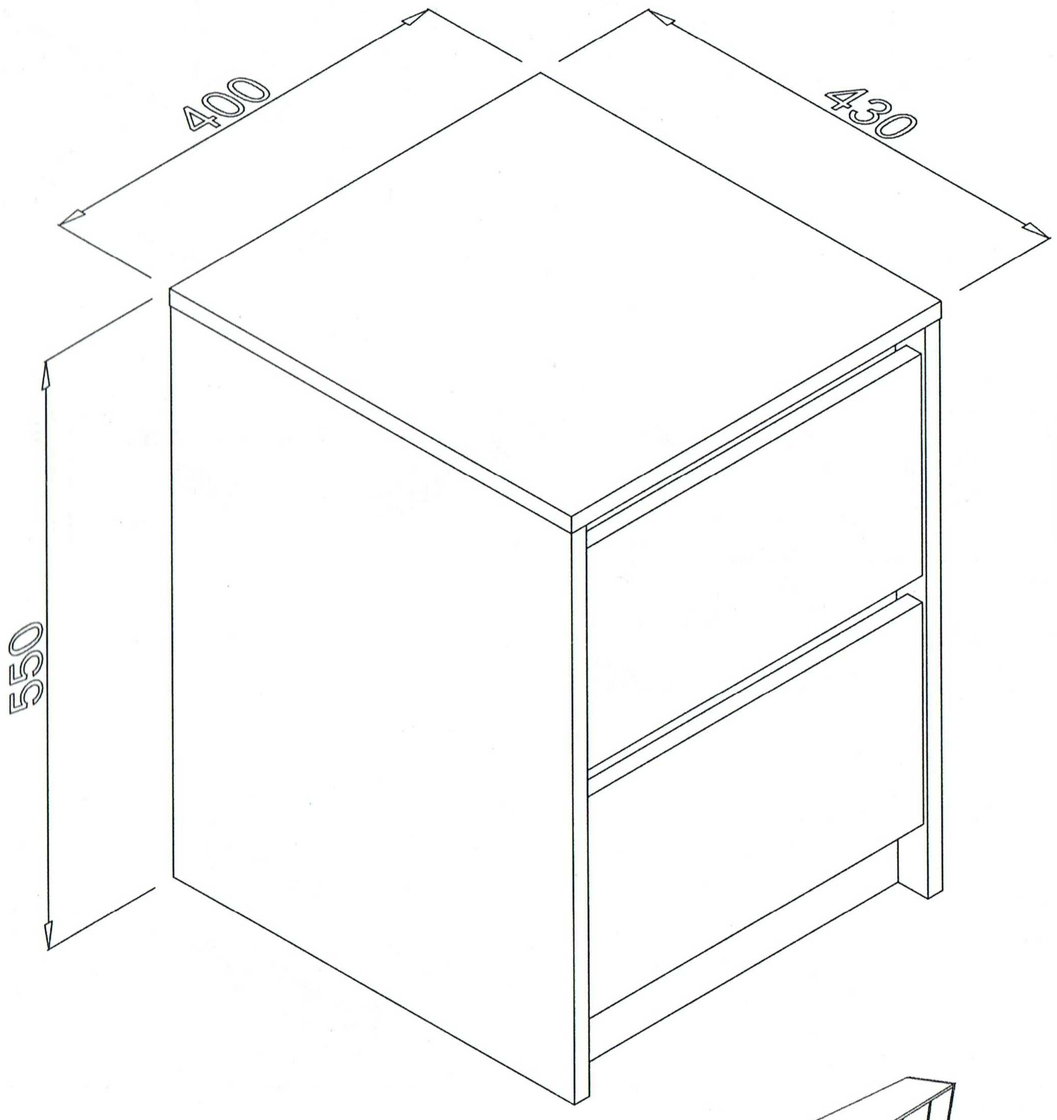
400
430
550

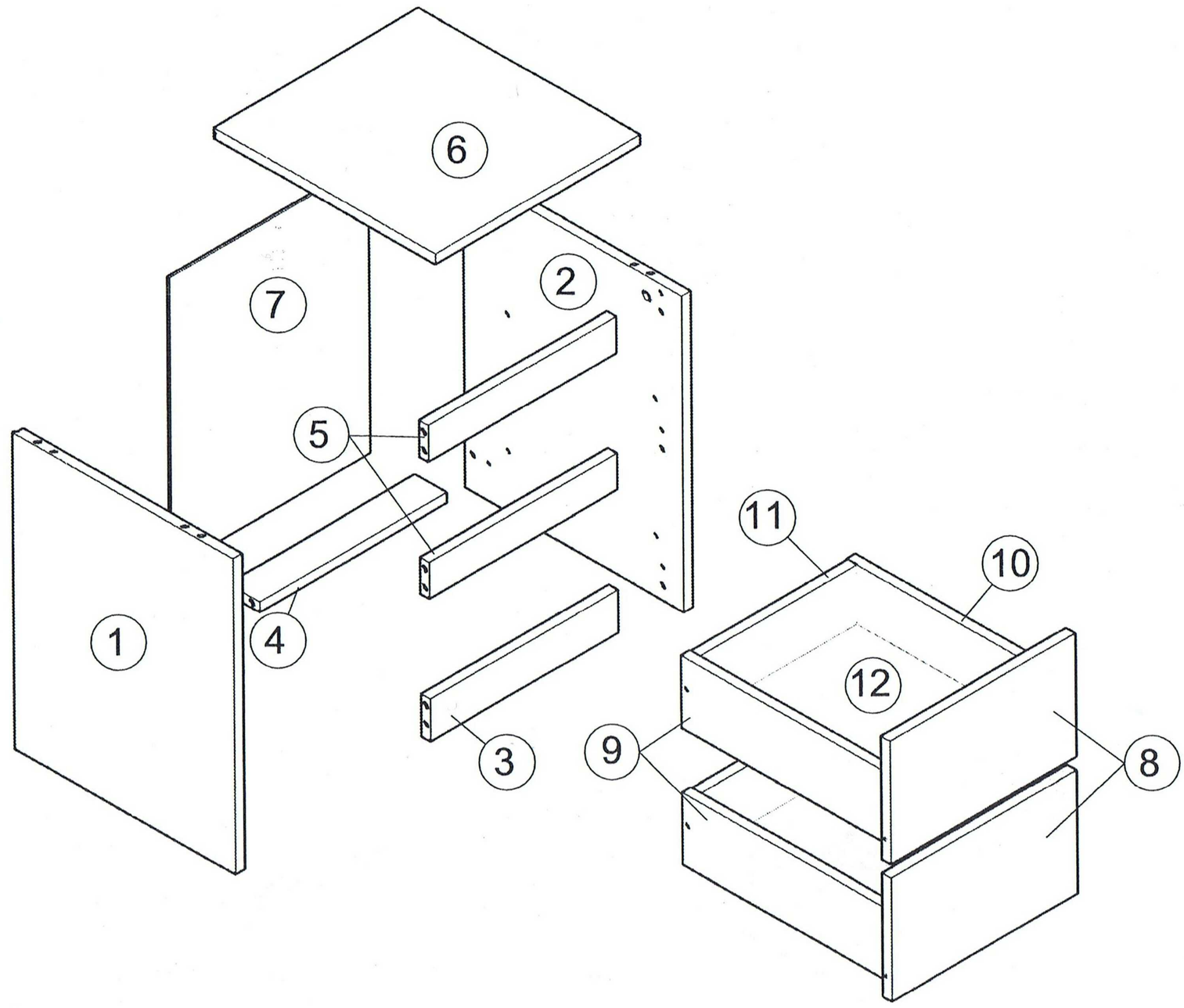
6
7
2
5
1
4
3
11
10
12
9
8

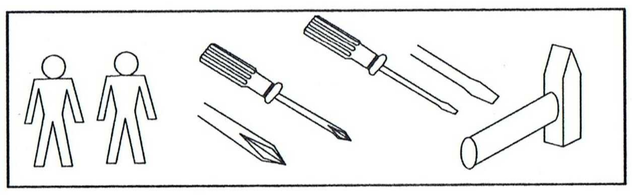

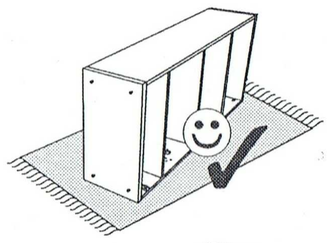

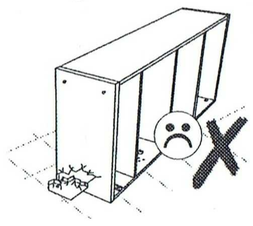

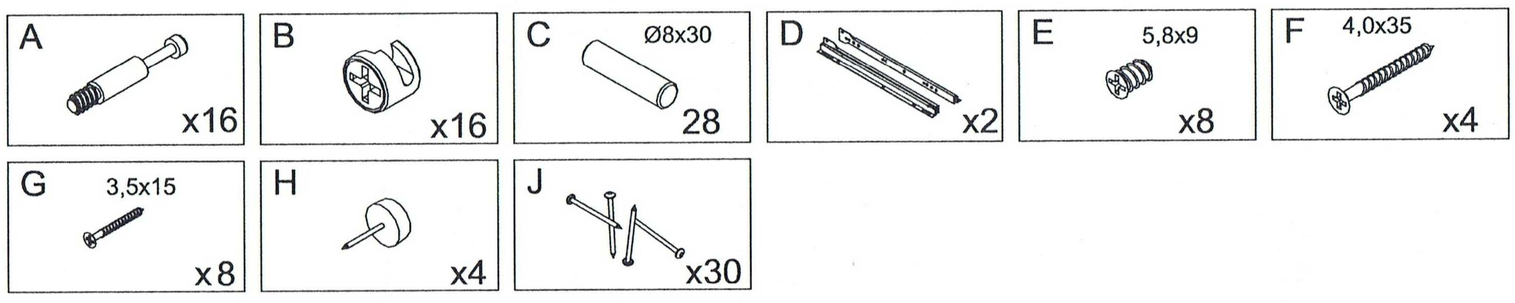
A x16
B x16
C Ø8x30 28
D x2
E 5,8x9 x8
F 4,0x35 x4
G 3,5x15 x8
H x4
J x30

1

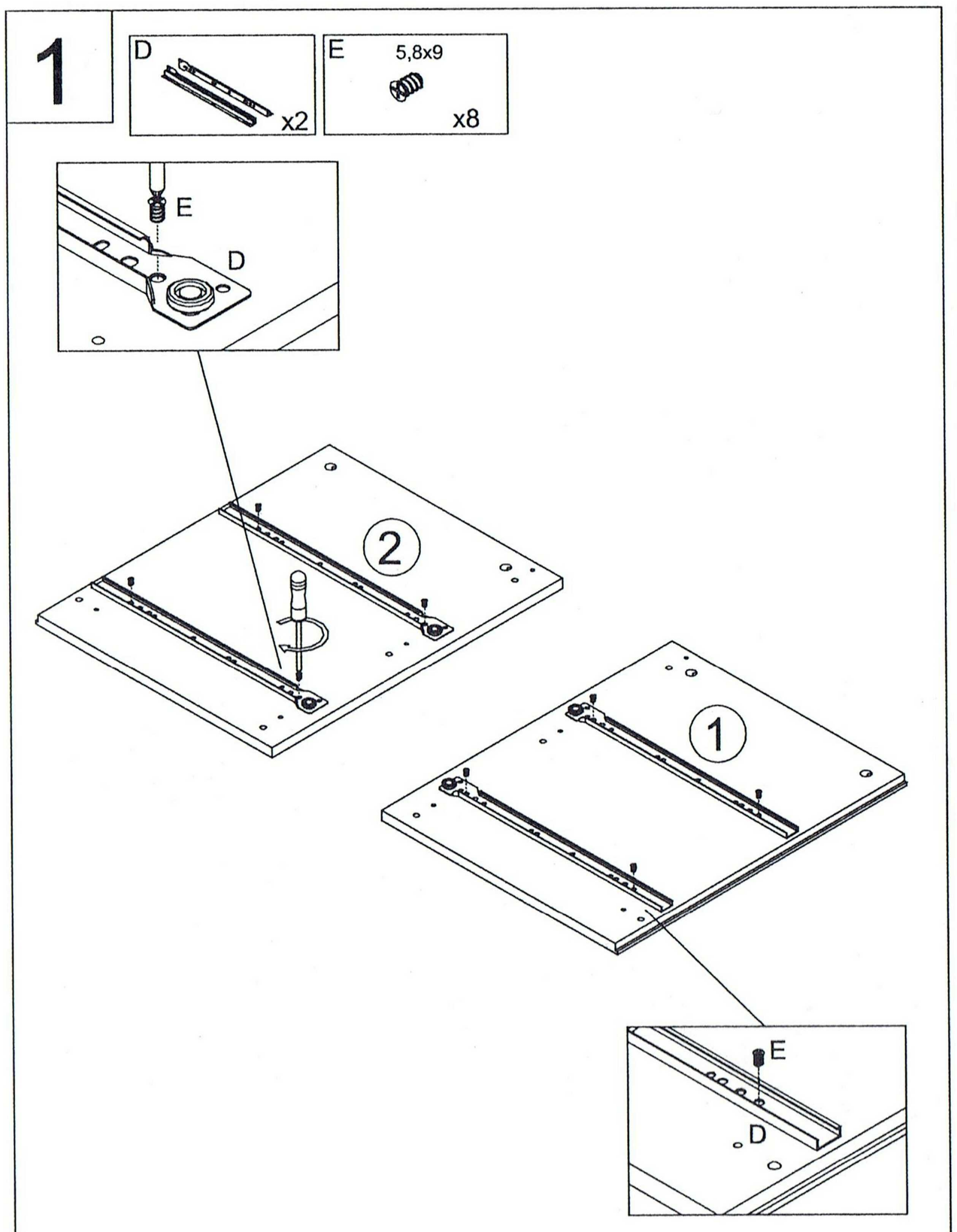
D x2
E 5,8x9 x8
E
D
2
1
E
D

2

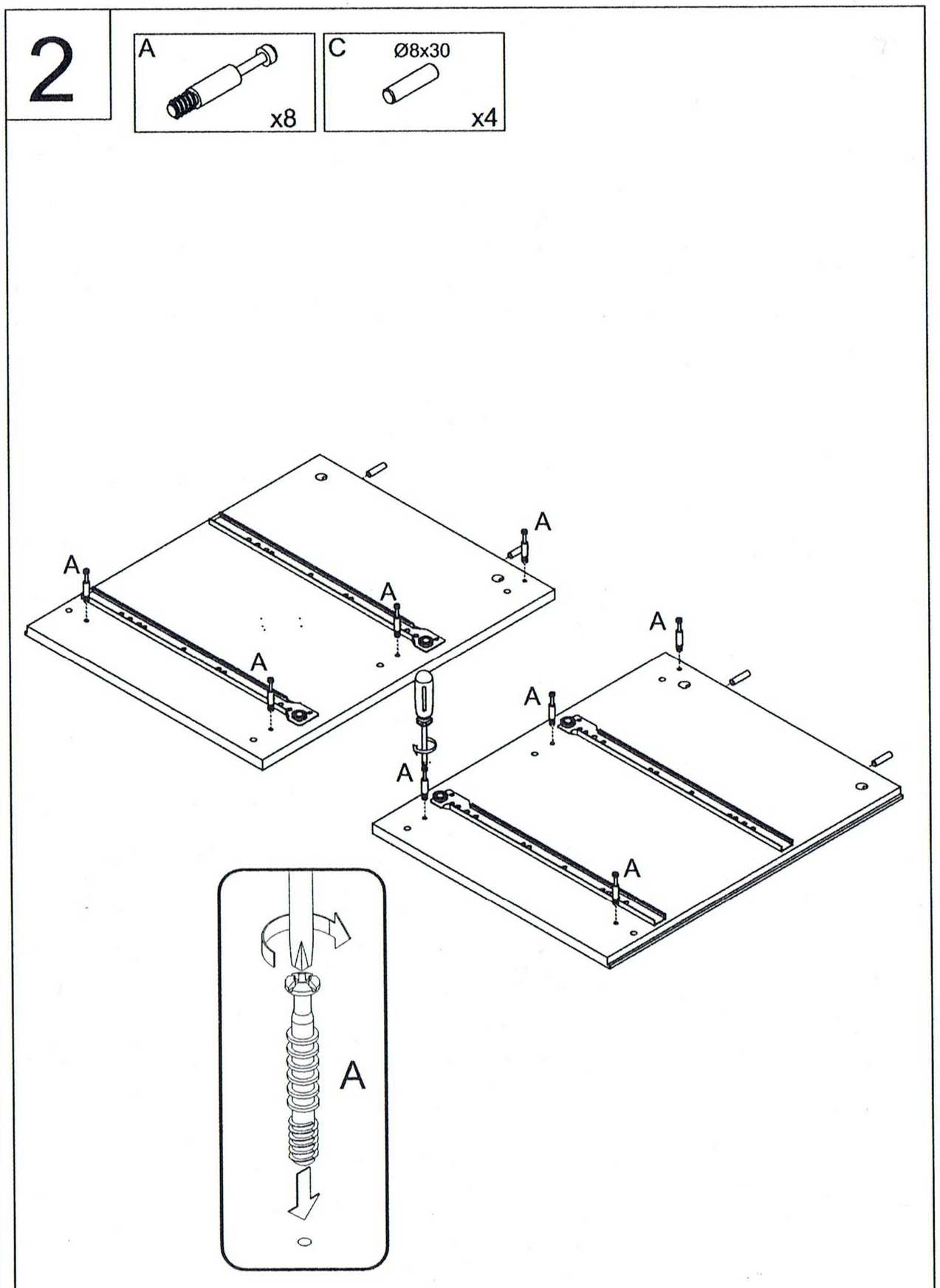
A x8
C Ø8x30 x4
A
A
A
A
A
A
A
A

3

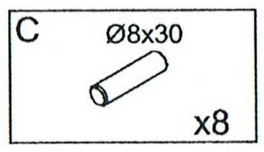
C
Ø8x30
x8

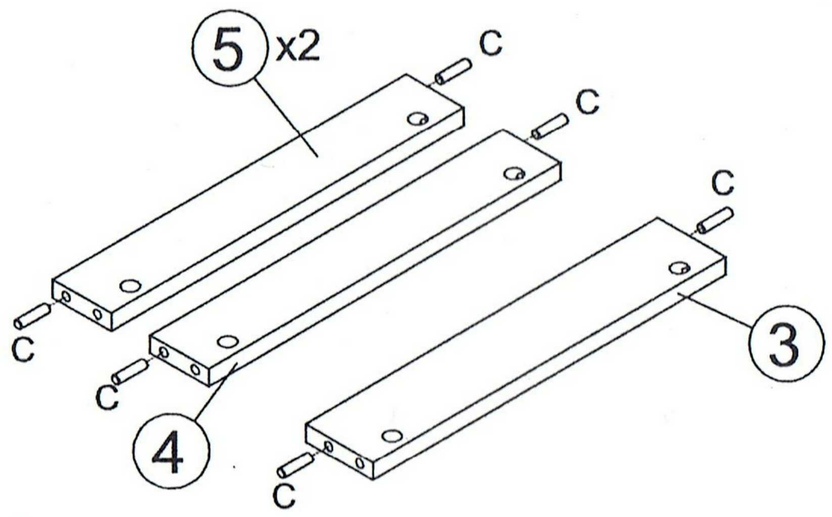
5 x2
C
C
C
C
C
C
4
3

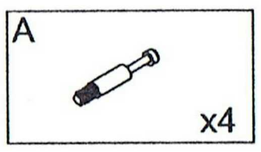
A
x4

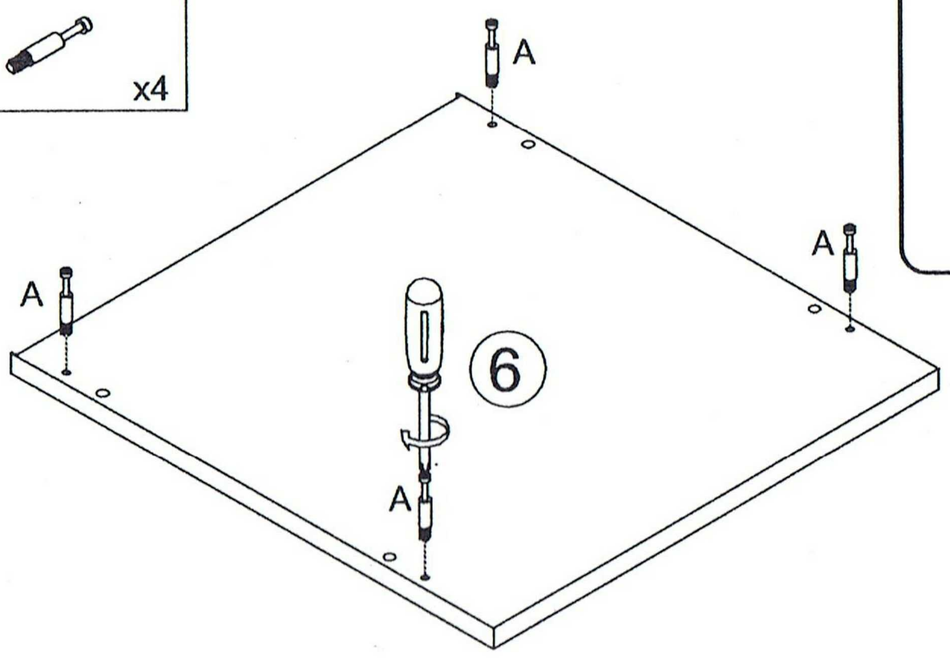
A
A
A
6
A

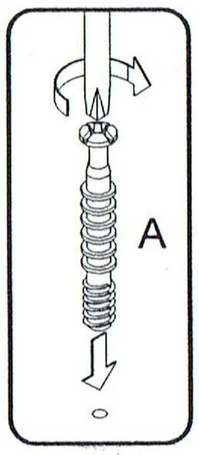
A

4

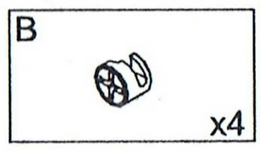
B
x4

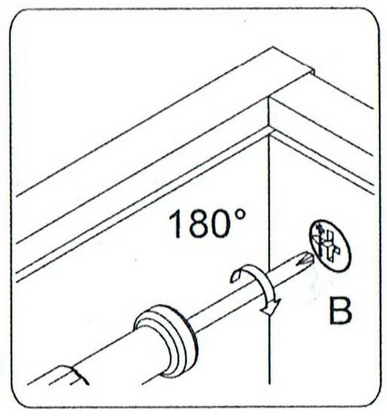
180°
B

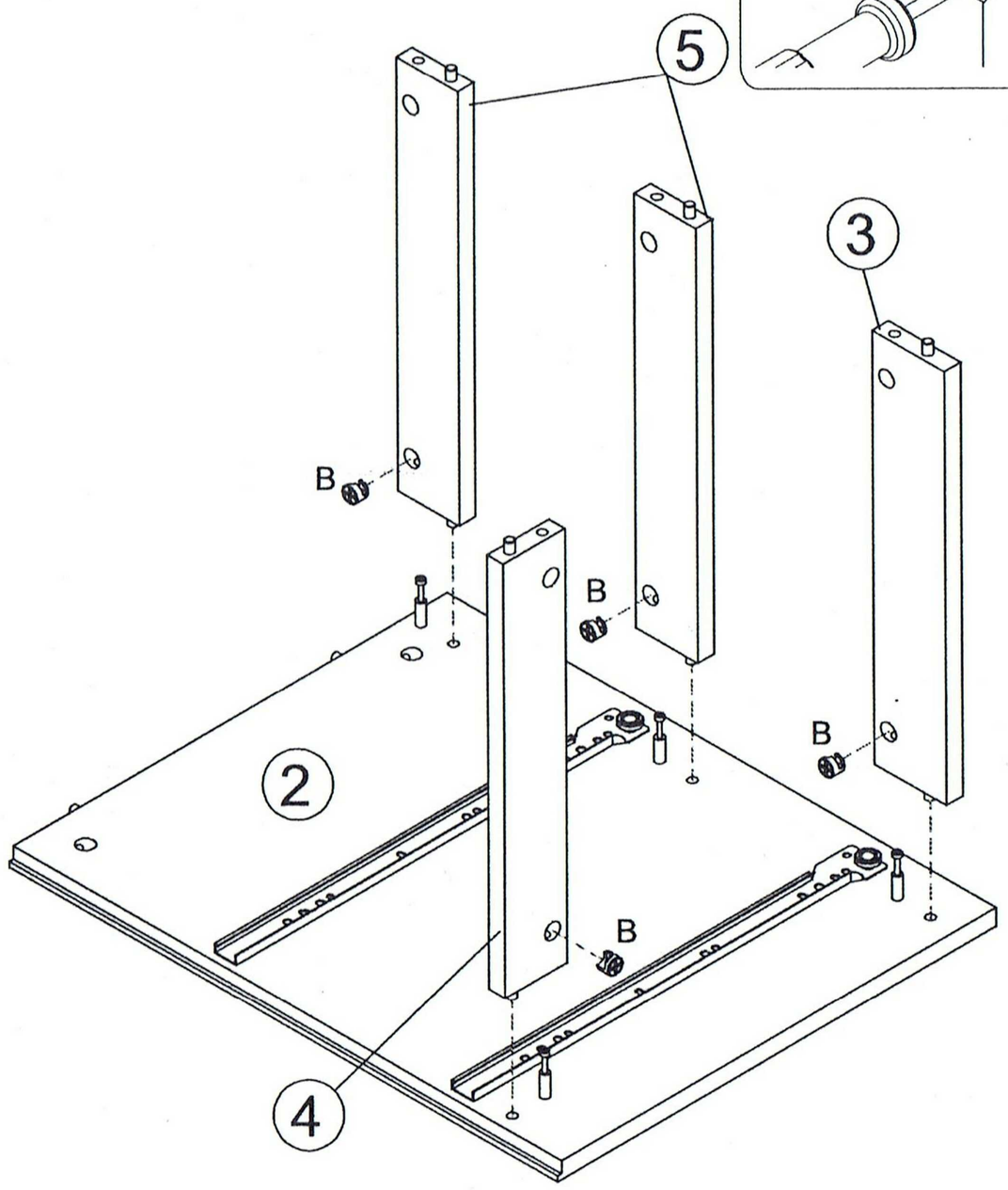
5
3
B
B
B
2
B
4

5

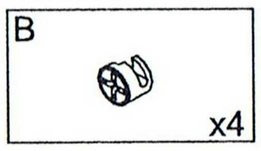
B
x4

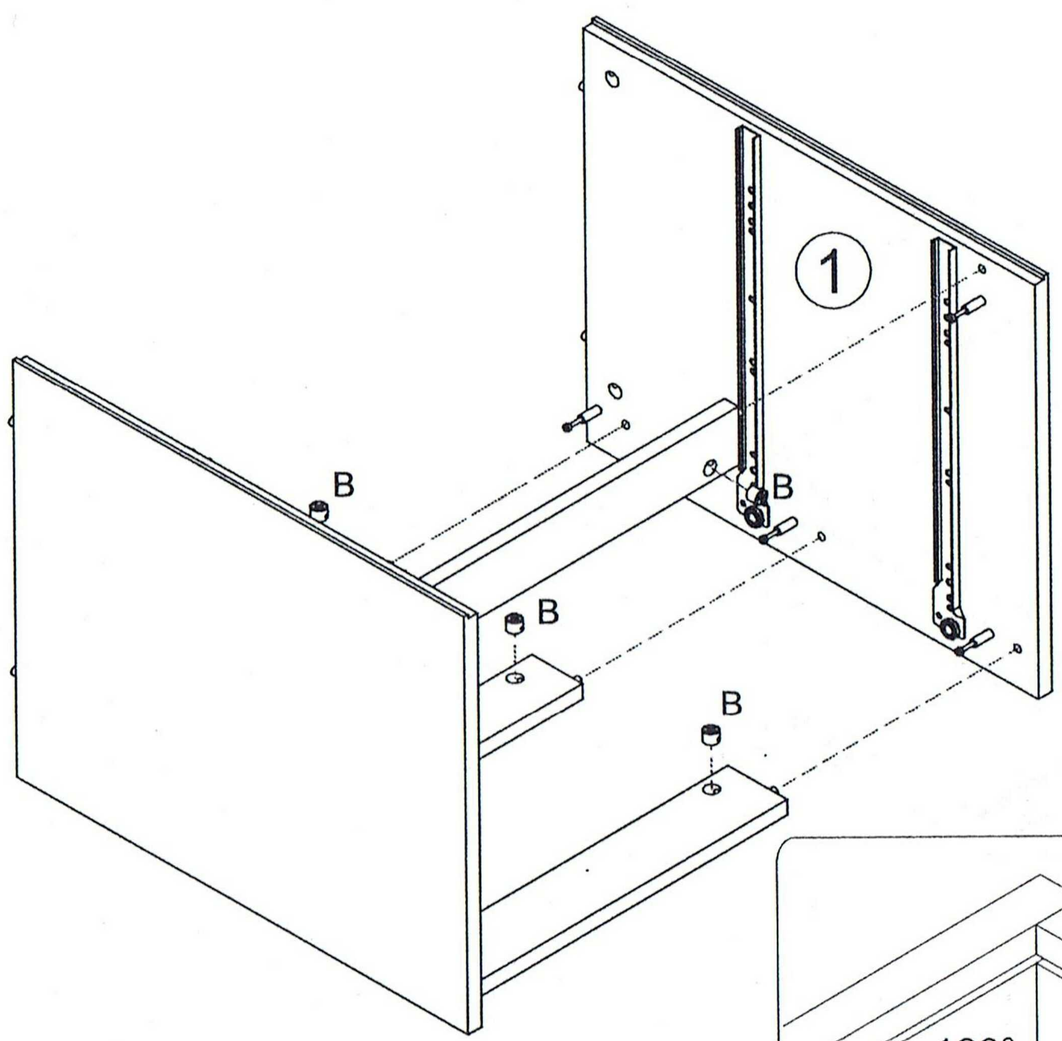
1
B
B
B
B

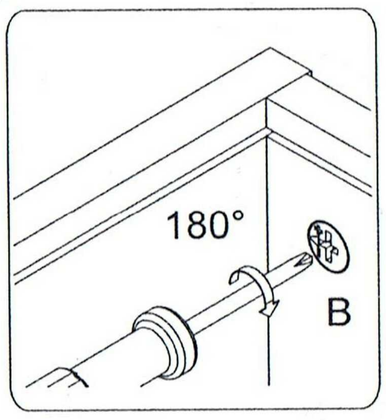
180°
B

6

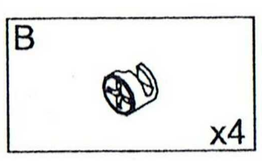
B
x4

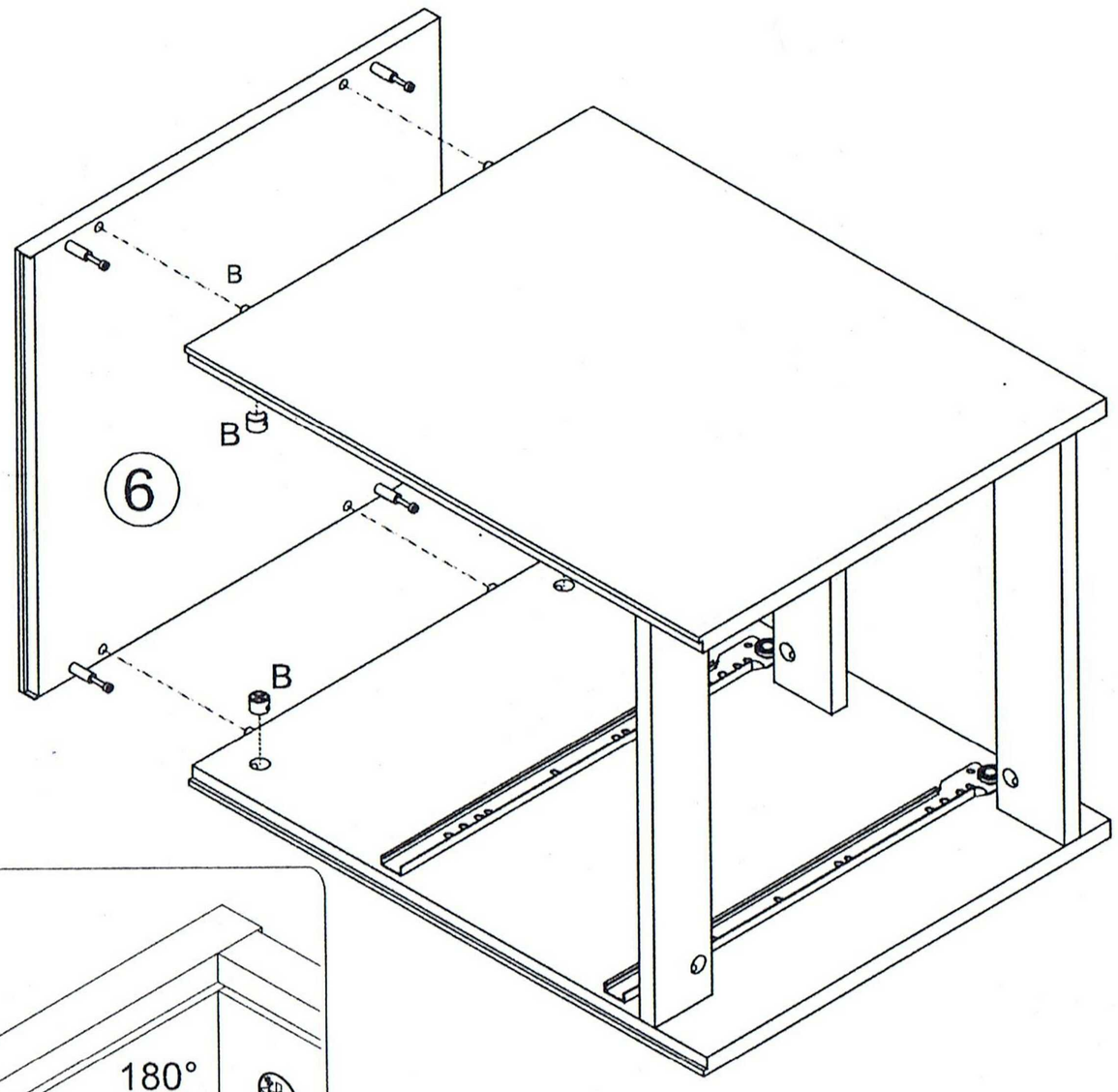
B
B
6
B

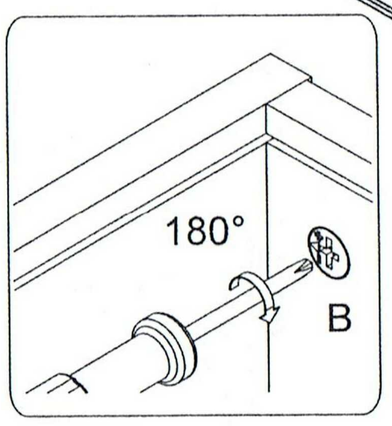
180°
B

7

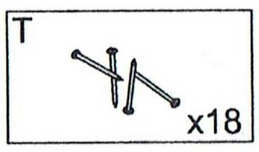
T
x18

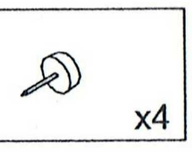
H
x4

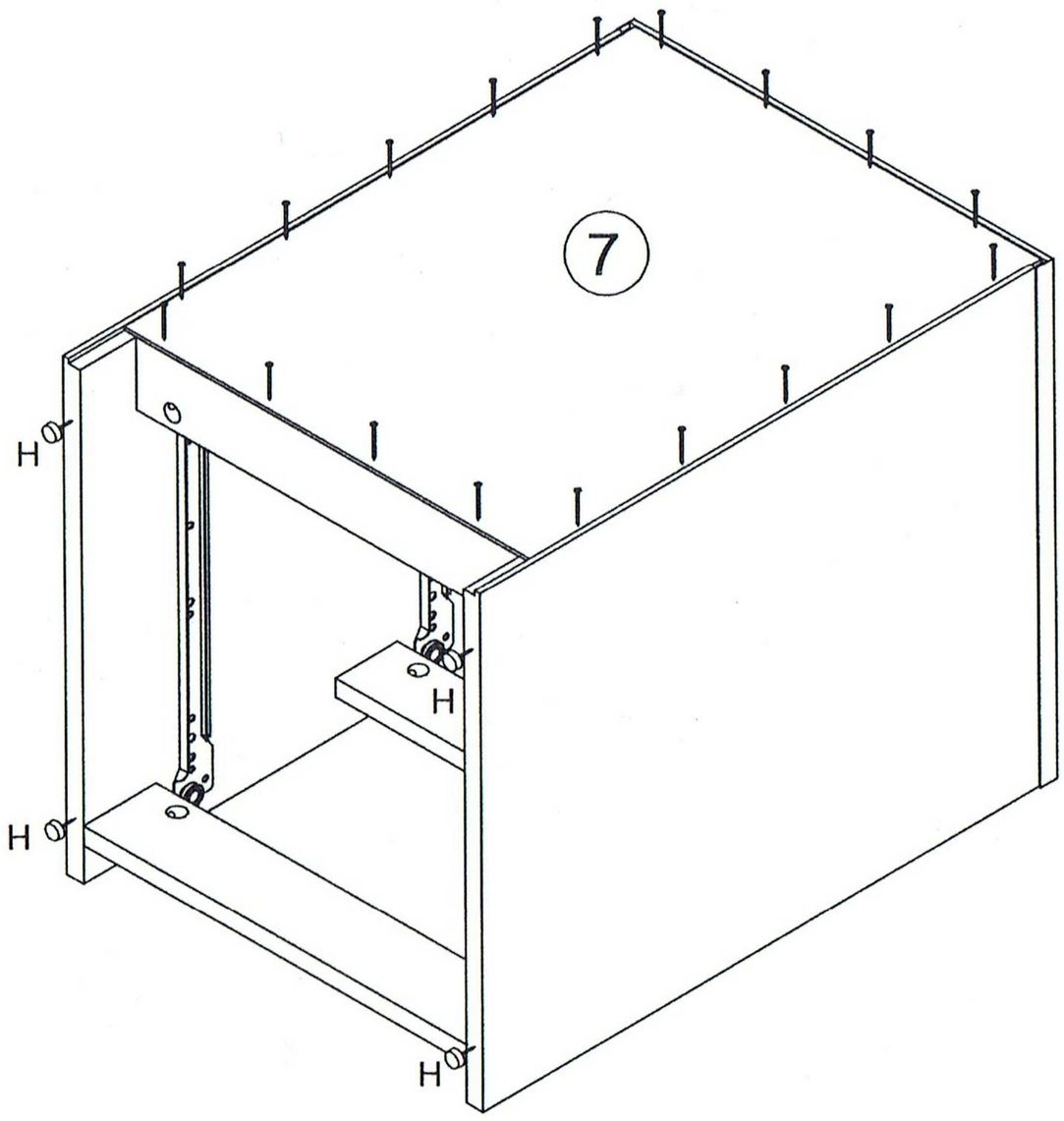
7
H
H
H
H

8

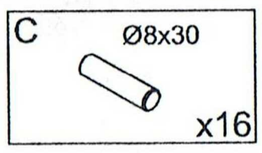
C
Ø8x30
x16

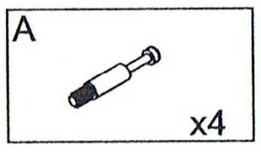
A
x4

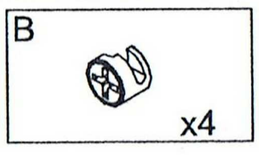
B
x4

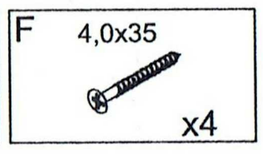
F
4,0x35
x4

x2

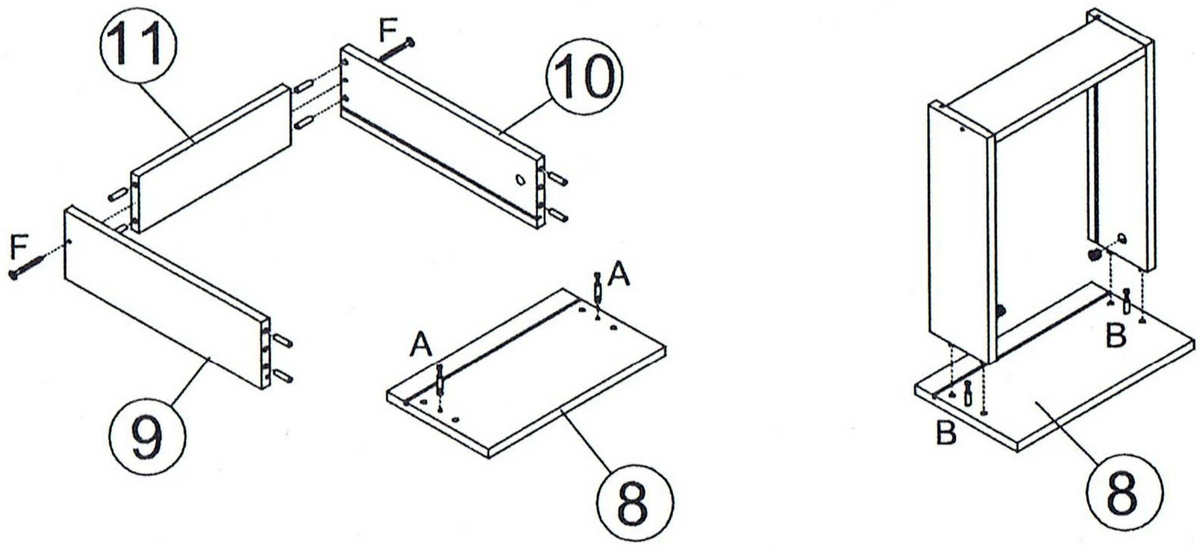
11
F
10
F
9
A
A
8
B
B
8

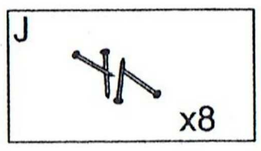
J
x8

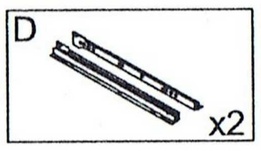
D
x2

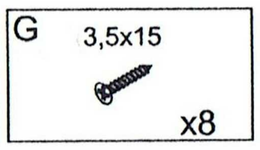
G
3,5x15
x8

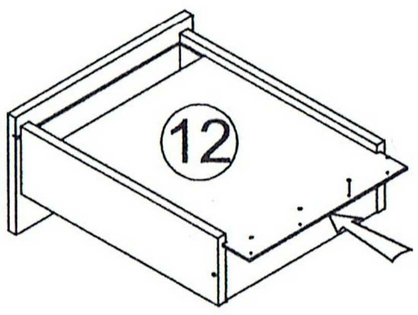
12

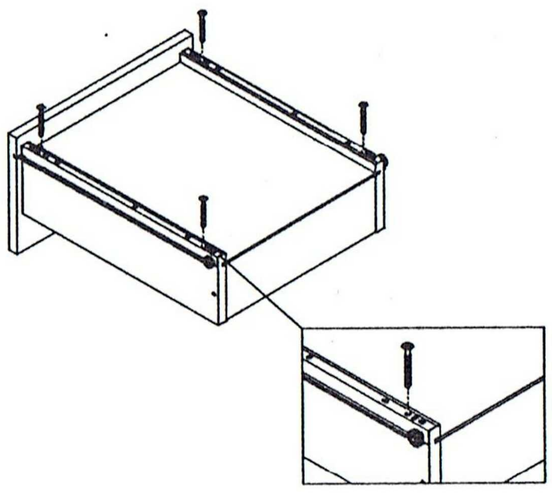
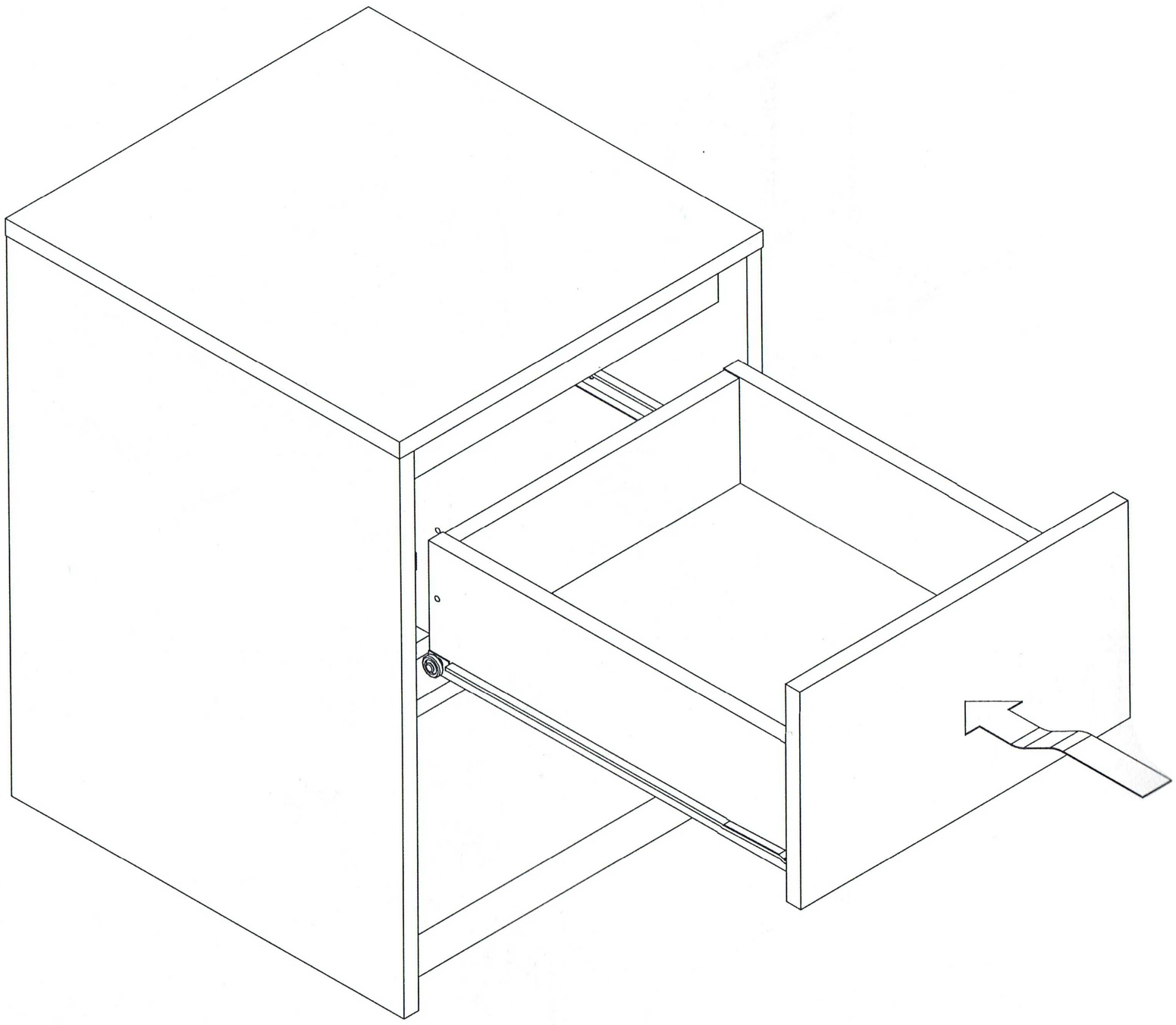
9