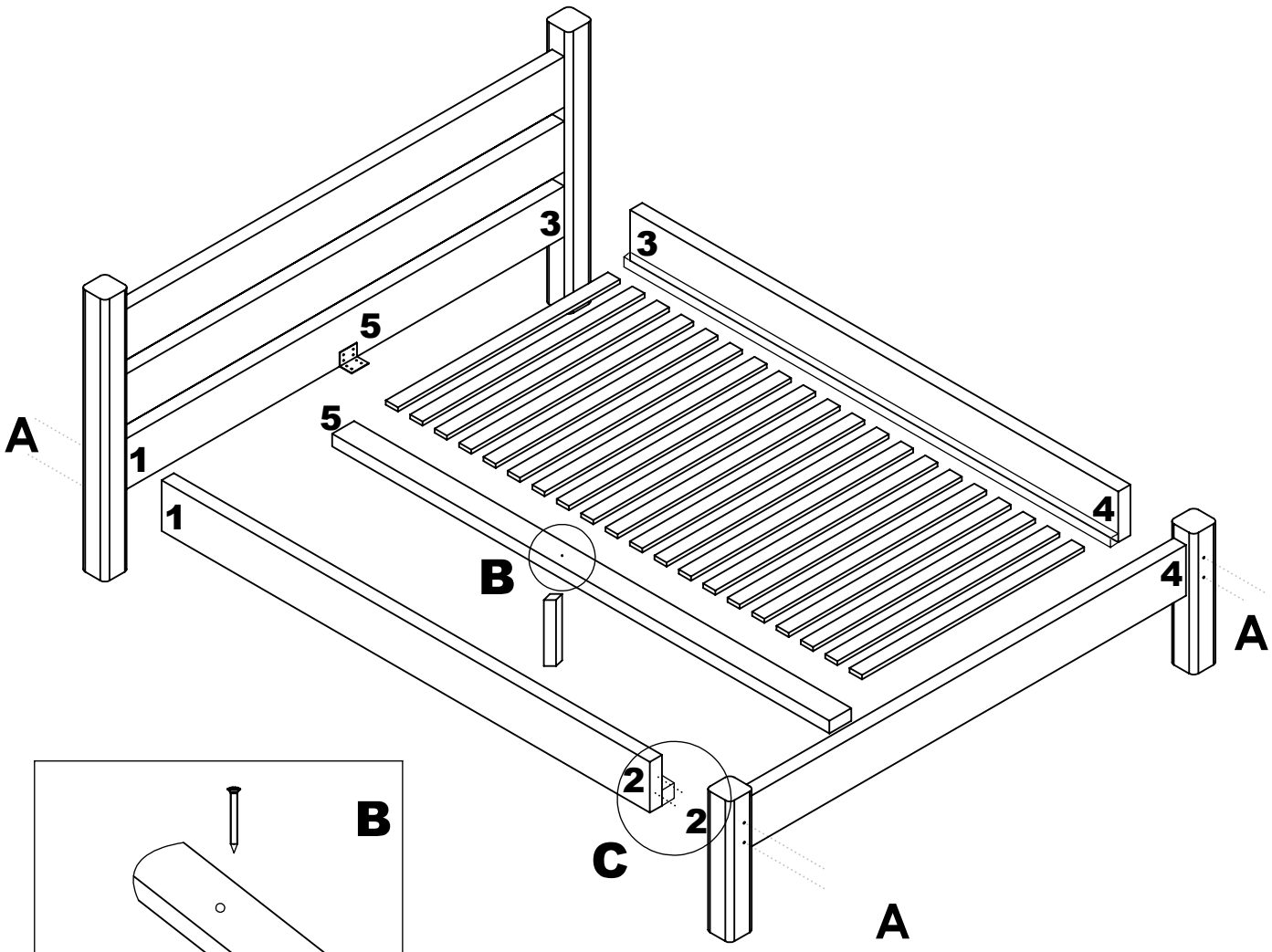
A
1
1
3
3
5
5
4
4
A
B
2
2
C
A

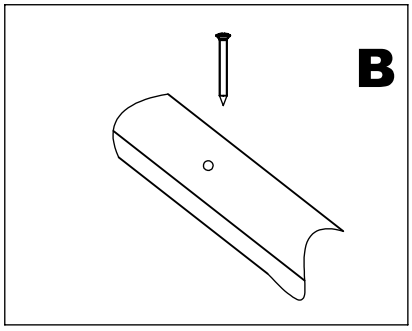
B

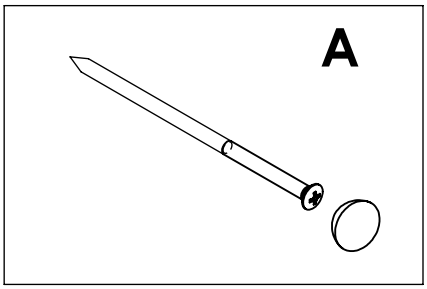
A

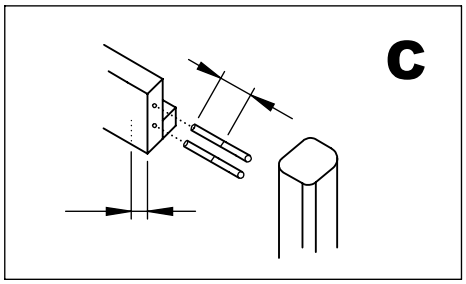
C