ASSEMBLY INSTRUCTION

MODEL: CF 8808 (5'6")

A	Headboard	1 pc
B	Footboard	1 pc
C	Side Rail	2 pcs
D	Leg	4 pcs
E	Center Rail	1 pc
F	Support Leg	2 pcs
G	Slat	28 pcs
H	Middle Holder	14 pcs
I	End Holder	28 pcs
J	JCBC M6 X 40	2 pcs
K	M4 x 65mm	1 pc
L	CSK M4 x 25mm	2 pcs
M	CSK M4 x 32mm	3 pcs
N	3 Holes Stiffener Slat	1 pc
O	Adjuster	2 pcs
P	JCBC M6 X 30	8 pcs
Q	Flat Washer	8 pcs

Step 1: Tighten the legs (D) to the footboard (B) as shown.

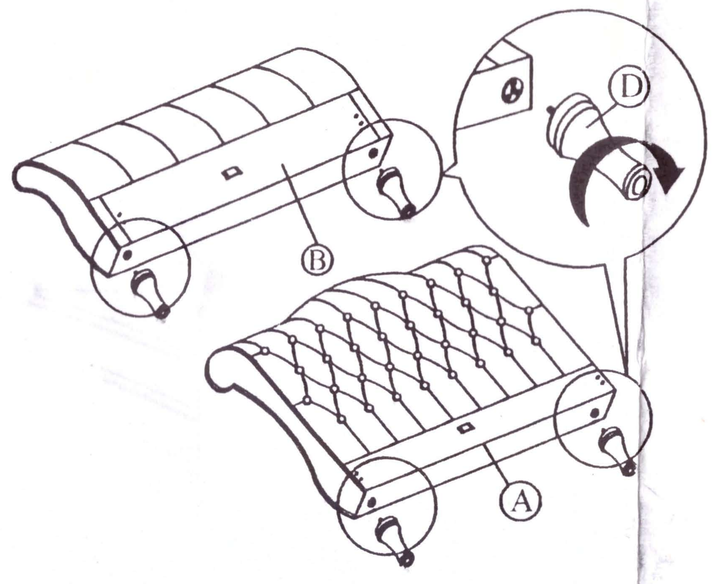

Step 2: Attach side rail to headboard and footboard and tighten the screws and flat washers to the headboard and footboard.

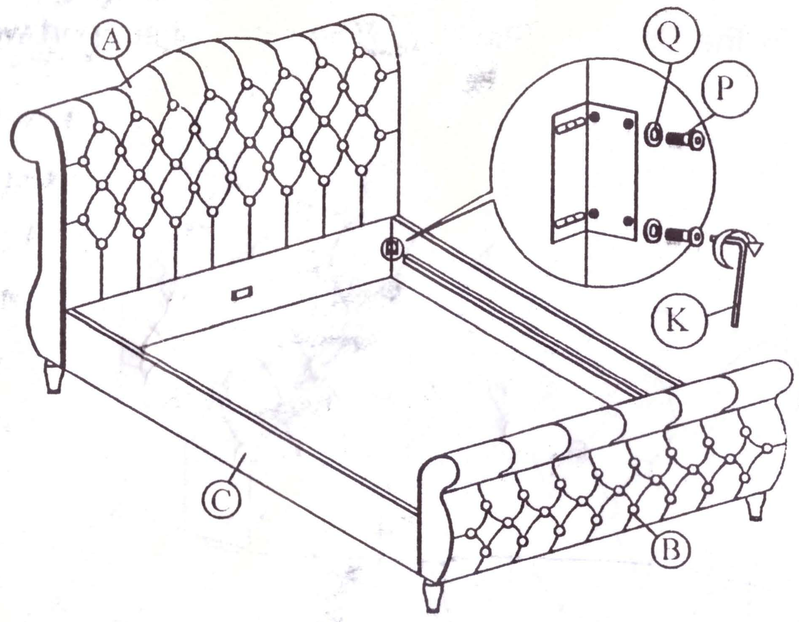

Step 3: Attach the support legs (F) to the center rail (E) of the bed as shown.

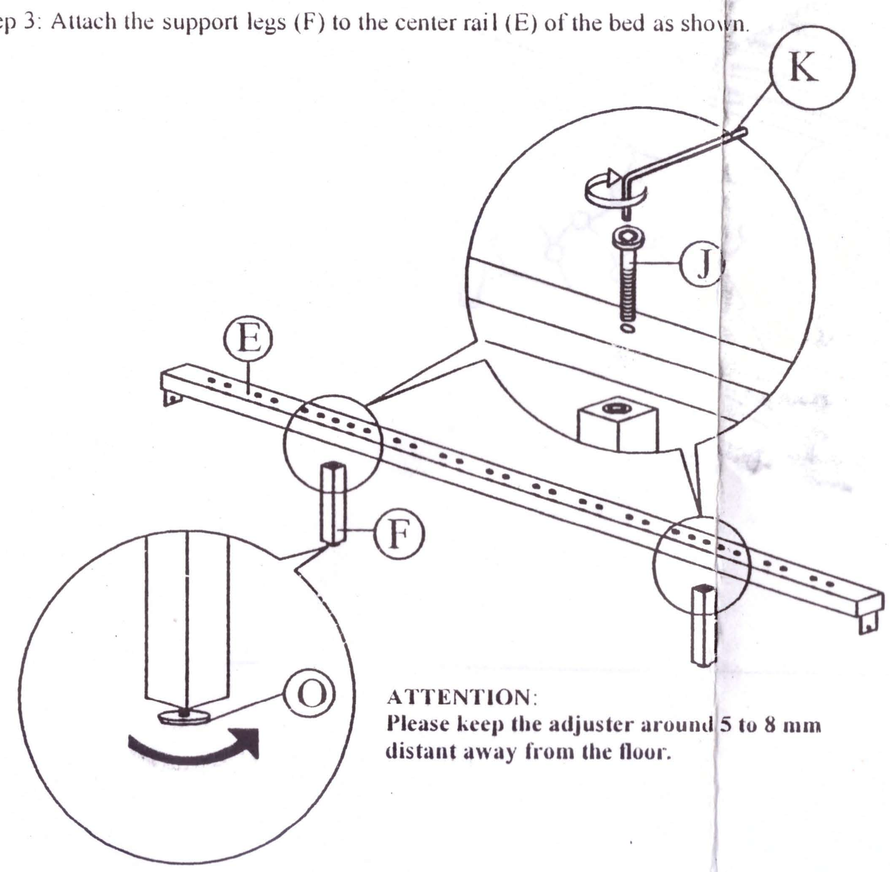

ATTENTION:
Please keep the adjuster around 5 to 8 mm distant away from the floor.

Step 4: Slide the center rail (E) to the headboard (A) and footboard (B). Tighten screws (L) using screw driver (not included) to the headboard (A) and footboard (B

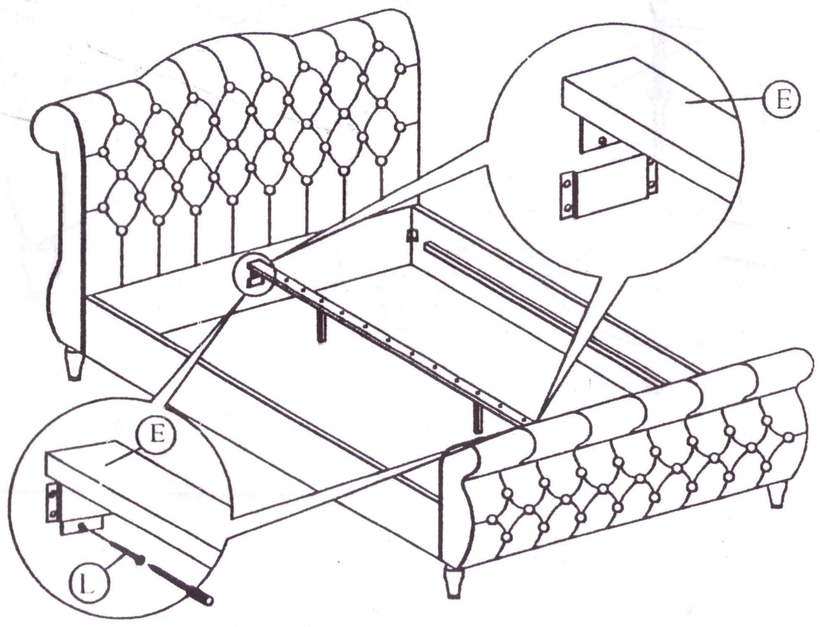
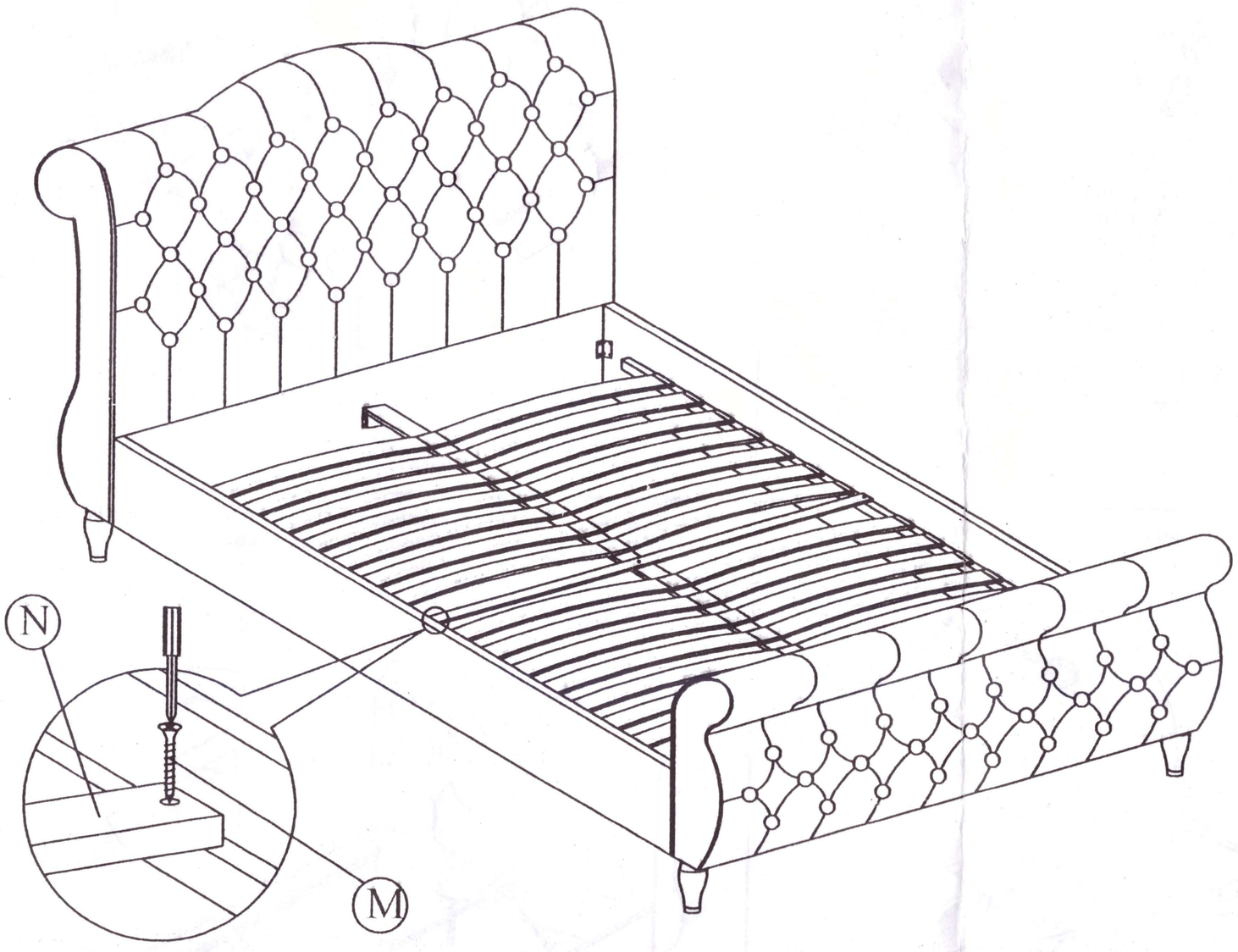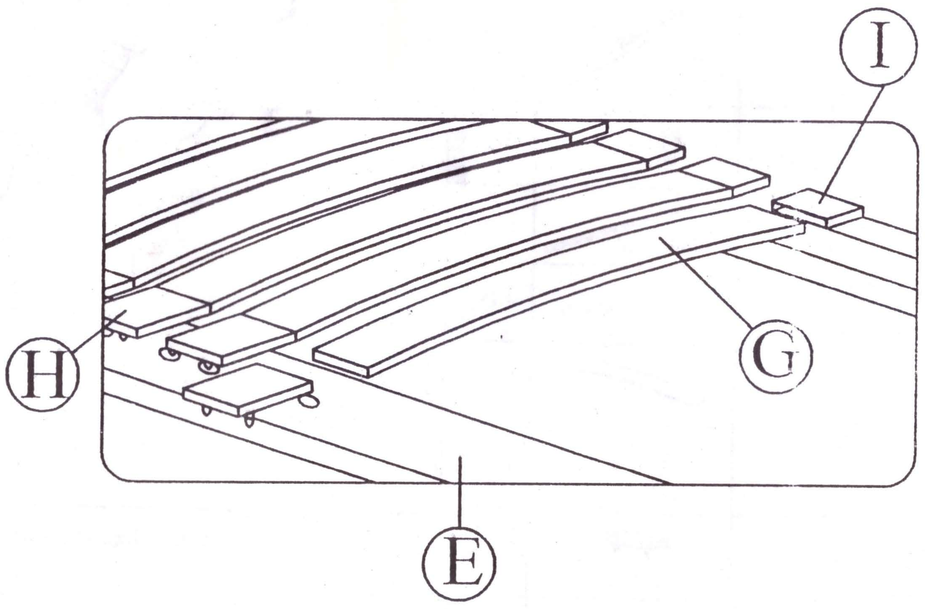
Step 5: Affix the Stiffener Slat (N) to the side rail support wood and the center rail (D) . follow by assembly of the slat holders with LVL slats as shown.