ASSEMBLY INSTRUCTION

MODEL: CF 8514-C
(4' & 4'6" & 5'6")

A	Headboard	1 pc
B	Footboard	1 pc
C	Side Rail	2 pcs
D	Leg	4 pcs
E	Center Rail	1 pc
F	Support Leg	2 pcs
G	Slat	28 pcs
H	Middle Holder	14 pcs
I	End Holder	28 pcs
J	JCBC M6 X 40	2 pcs
K	K1 M5 x 70mm; K2 M4 x 65mm	1 pc
L	CSK M4 x 25mm	2 pcs
M	CSK M4 x 50mm	8 pcs
N	CSK M4 x 16mm	4 pcs
O	CSK M4 x 32mm	3 pcs
P	Stiffener Slat (3 Holes)	1 pc
Q	Adjuster	2 pcs

Step 1: Tighten the legs (D) to both headboard (A) and footboard (B) as shown.

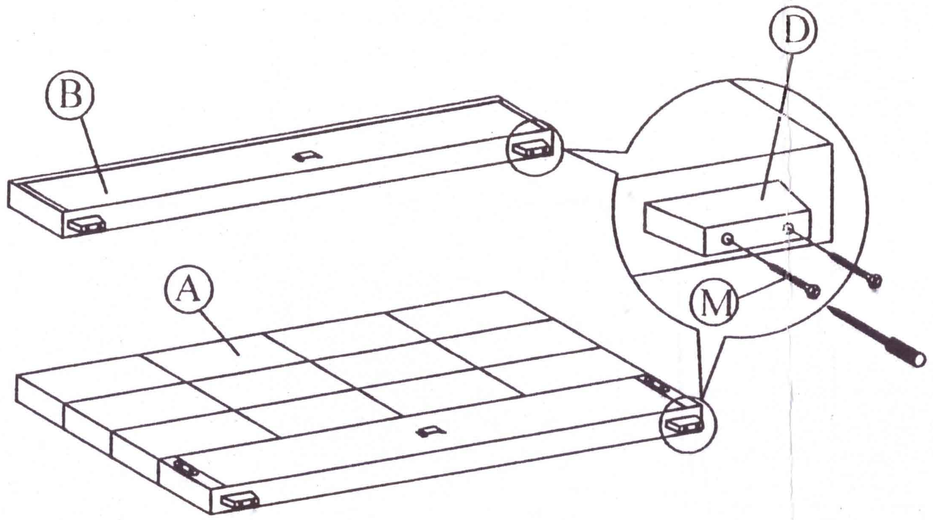

Step 2: Attach side rail (C) to headboard (A) and footboard (B) by pushing the bracket down to fit it.

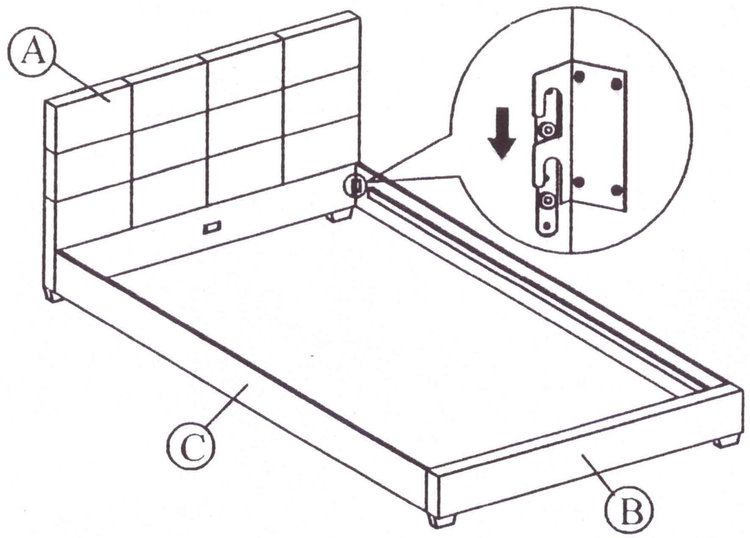

Step 3: Attach the support legs (F) to the center rail (E) of the bed as shown.

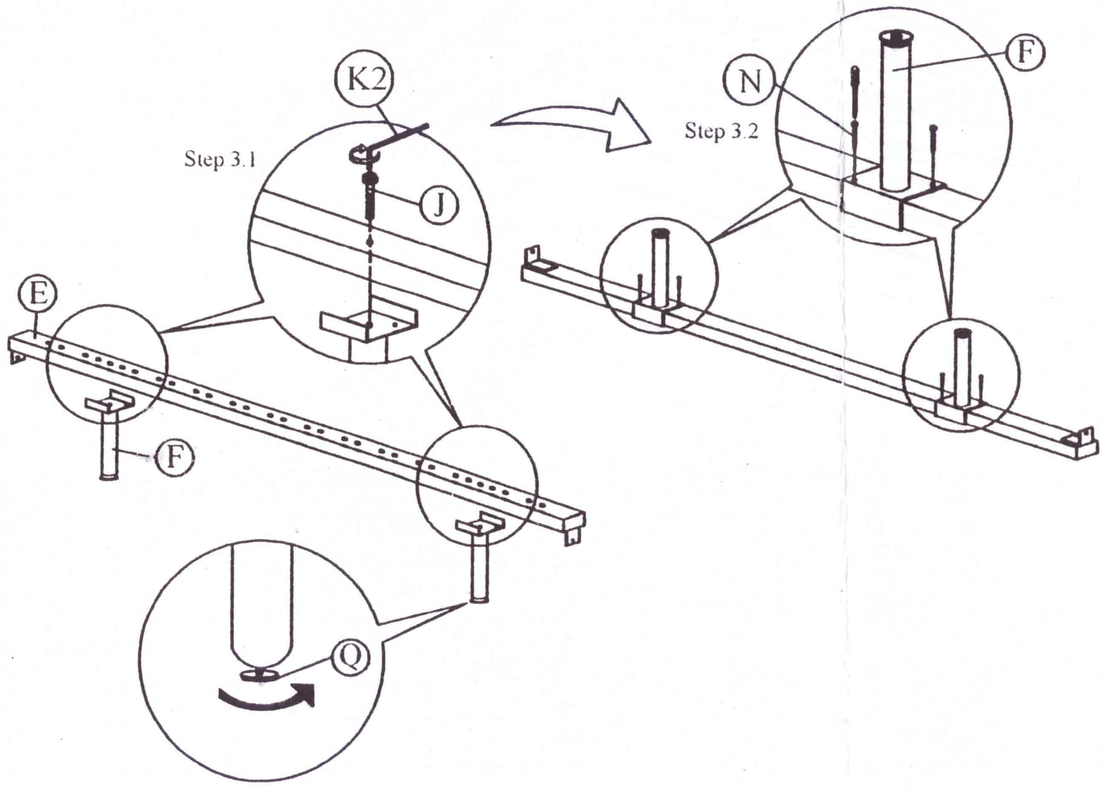

Step 4: Slide the center rail (E) to the headboard (A) and footboard (B). Tighten screws (L) using screw driver (not included) to the headboard (A) and footboard (B)

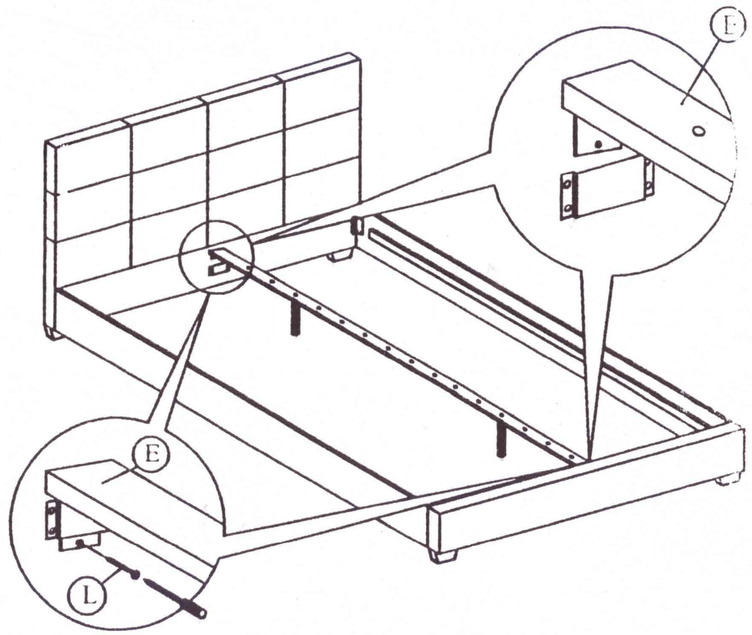
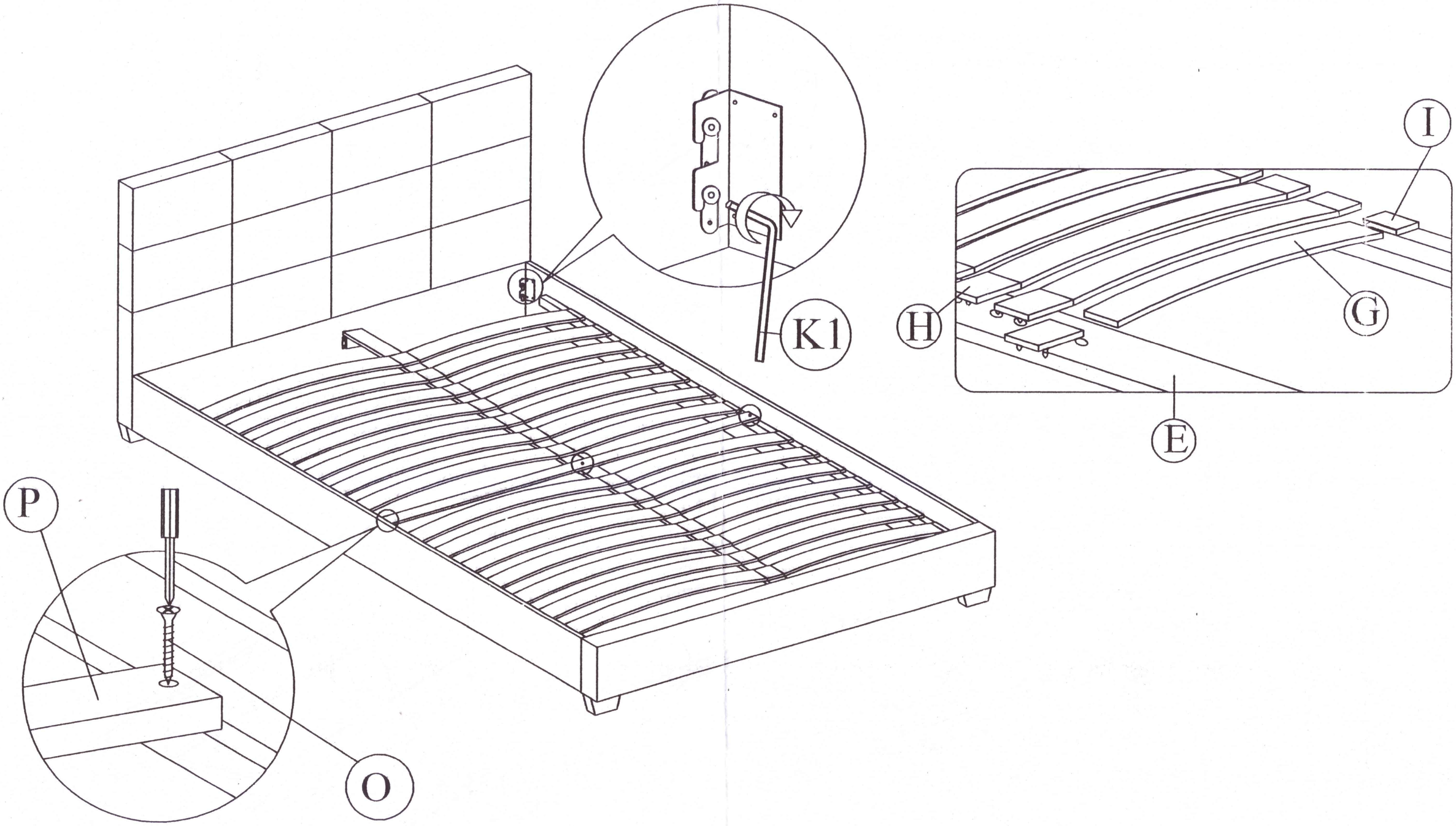
Step 5: Affix the Stiffener Slat (P) to the side rail support wood and the center rail (E) . Tighten all the 4 corner ,follow by assembly of the slat holders with LVL slats as shown.