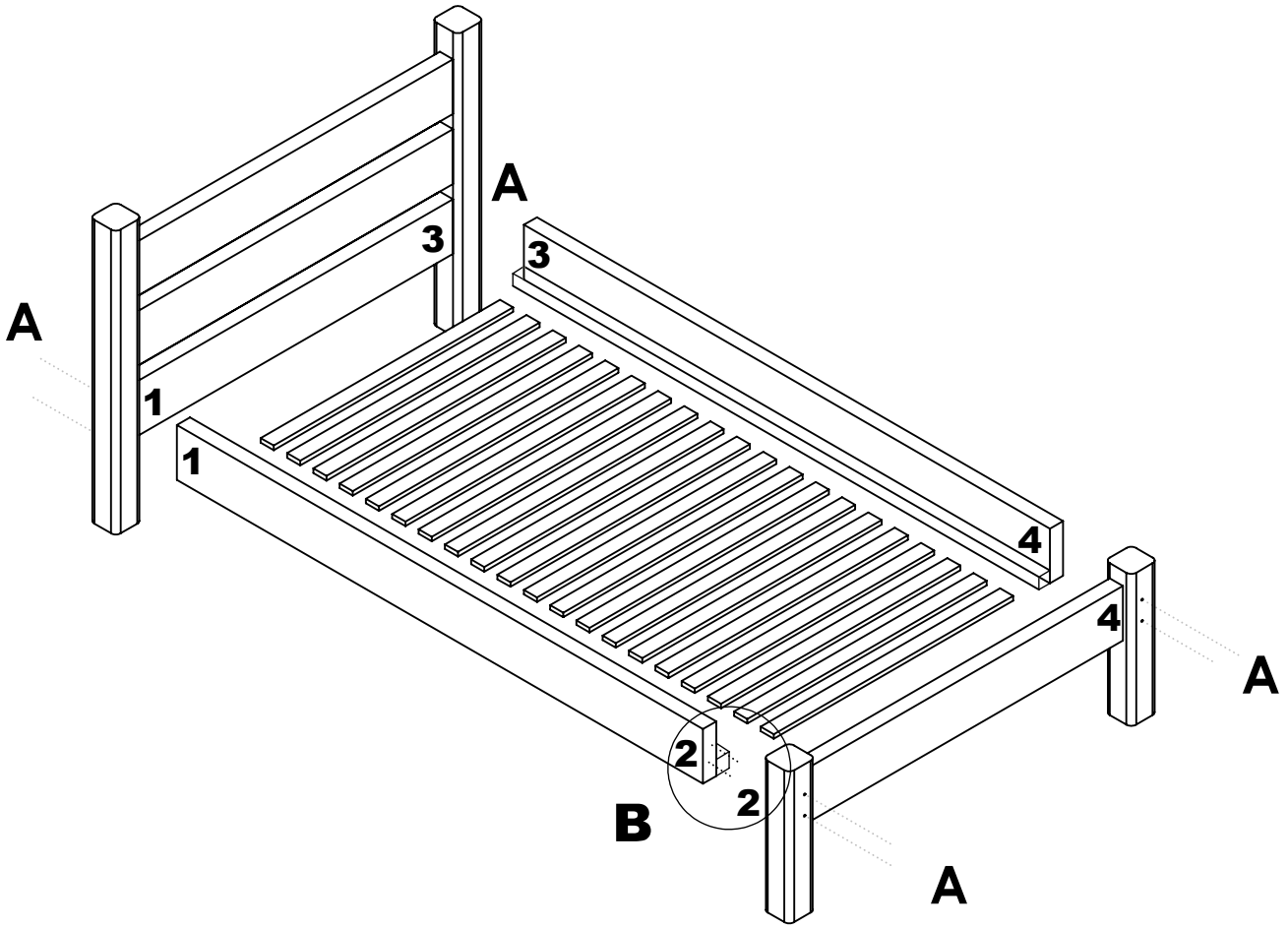
A
3
3
A
1
1
4
4
A
2
2
B
A

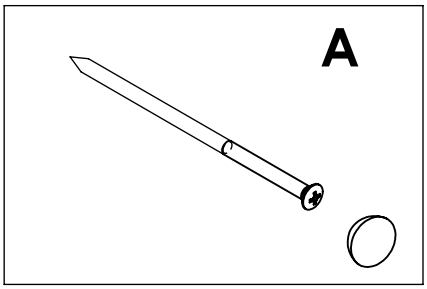
A

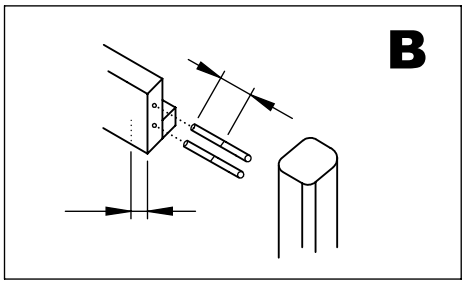
B